RECORD OF CHANGES

DIRECTIVE NO. AC 20-84

CHANGE TO BASIC	SUPPLEMENTS			OPTIONAL USE	CHANGE TO BASIC	SUPPLEMENTS			OPTIONAL USE
1									
2									

FAA Form 1320-5 (5-68) SUPERSEDES PREVIOUS EDITION

AC NO: 20-84

DATE: 22 Jan 73

ADVISORY CIRCULAR

DEPARTMENT OF TRANSPORTATION
FEDERAL AVIATION ADMINISTRATION

SUBJECT: MAINTENANCE INSPECTION NOTES FOR BOEING B-727 SERIES AIRCRAFT

1. PURPOSE. This advisory circular provides inspection notes which can be used for the maintenance support program for certain structural parts of the B-727 series aircraft.

2. DESCRIPTION. Maintenance inspection matters on the wing and fuselage are reviewed with a view toward supplementing information currently available.

3. REFERENCES.

   a. Advisory Circular 20-61, Nondestructive Testing Techniques for Aircraft.

   b. Advisory Circular 65-9, Airframe and Powerplant Mechanics General Handbook.

   c. Advisory Circular 43.13-1, Acceptable Methods, Techniques and Practices - Aircraft Inspection and Repair.

   d. Defense Metals Information Center (DMIC) Report, S-25, dated June 1, 1968, Current Problems and Prevention of Fatigue.

   e. Advisory Circular 20-9, Personal Aircraft Inspection Handbook.

Initiated by: AFS-302/AAC-230

4. HOW TO GET THIS PUBLICATION.

a. Order additional copies of this publication from:

Department of Transportation
Distribution Unit, TAD-484.3
Washington, D. C. 20590

b. Identify the publication as: Advisory Circular No. 20-84, Maintenance Inspection Notes For Boeing B-727 Series Aircraft.

C. R. MELUGIN, JR.
Acting Director, Flight Standards Service

TABLE OF CONTENTS

1. INTRODUCTION. This advisory circular provides maintenance information which can be used, but is not required to be used, by mechanics, repair agencies, owners, and operators in developing maintenance programs, making improvements in existing programs, and conducting inspection and repairs on certain structural parts of Boeing B-727 airplanes. The material is based, in part, upon information made available through discussions with personnel who have maintained these types of airplanes for thousands of hours of time in service. The intent of the circular is to impart some of this knowledge to other interested persons. Appendices 1, 2, 3 and 4 provide a technical digest of material on corrosion, fatigue failures, nondestructive testing and station charts, respectively.

2. DESCRIPTION. This circular contains guidance material for performing maintenance on wing, fuselage, and empennage structure. The information has been derived from service experience. It does not comprise a full and complete maintenance program for the subject aircraft, but should be considered as supplemental maintenance data. Included in the circular is a listing of selected maintenance difficulties which have been reported since 1966 by air carrier operators.

3. BACKGROUND.

* a. Used Aircraft. The Administrator realizes that several different types of transport aircraft are being phased out of service by some airlines and are being purchased by other operators who may not be familiar with the scope of required maintenance and the means which have been used to keep the aircraft in a safe condition. *

b. Maintenance "Know How." Since maintenance "know how" is not transferred with the aircraft, the new operator generally goes through a learning cycle before he is able to rapidly pinpoint the important/critical problem areas of the aircraft. In this respect, identification of known areas where structural problems have been experienced will help in the preparation of an initial maintenance program by a new operator. It also can serve as a guide to other operators who have not accumulated sufficient service experience to have knowledge of all the problem areas of the aircraft.

4. GENERAL DISCUSSION OF STRUCTURE SURVEILLANCE.

a. Manufacturer's Service Bulletins. The manufacturer has published service bulletins containing its recommendations concerning the inspection, repair, and modification of aircraft. Most of these bulletins cover known areas; however, some are predictive in nature and have been issued even though no fatigue damage has been identified in the fleet. Because of differences in structural configuration, most service bulletins apply only to certain aircraft. Effectivity is shown in each bulletin. Additional bulletins may be published by the manufacturer, and a service bulletin index is available from the manufacturer which is updated periodically.

b. Other Documentation. Further, the manufacturer has published the following documents to aid in maintaining the aircraft in serviceable condition:

* Maintenance Planning Document (D6-8766)
Maintenance Manual, (D6-Series, different for each operator)
Overhaul Manual, (D6-4420)
Structural Repair Manual (D6-4062)
NDT Document (D6-7170) *

These documents are updated from time to time by the manufacturer.

Structural Item Interim Advisories are published by the manufacturer to notify operators of newly found problems which may be of fleetwide significance and may or may not be followed by service bulletins.

c. Maintenance Action. For adequate maintenance of the B-727 structure, every operator should have in his possession and be conversant with the above documentation, including service bulletins applicable to his particular aircraft. He should also obtain complete service records from previous owners and become familiar with the structural history of his aircraft, including information on maintenance procedures followed, major repairs made, and preventive modifications and/or repair work incorporated per service bulletins. This is essential to carry out the followup procedures required, and to avoid unnecessary work where corrective action has already been taken.

(1) The new operator should contact the manufacturer regarding any areas requiring clarification.

(2) The operator should keep himself informed of new developments and arrange to be supplied with revised and new documentation by the manufacturer. Consultation with the manufacturer and/or more experienced operators should take place from time to time as necessary, to establish which service bulletins have structural significance and when they would best be incorporated.

(3) The maintenance program established by the new operator should reflect changes in environment and usage of the aircraft (e.g., shorter flights, intermittent use, etc.).

d. Airworthiness Directives. It is emphasized that the material in this circular does not supersede any of the requirements of airworthiness directives issued under Part 39 of the Federal Aviation Regulations.

e. Certification. Type certificate No. A3WE was issued to The Boeing Company, Renton, Washington, on 24 December 1963. The basis for certification was CAR 4b (dated December 1953). The type certificate data sheet No. A3WE prescribes conditions and limitations for which the type certificate was issued. The latest revision of the type certificate data sheet, at the time this document was published, was
* revision No. 10 (dated 1 September 1972). *

5. TYPE OF CONSTRUCTION. The aircraft structure is comprised of three major sections: the fuselage, the wing, and the empennage. The structure is designed to provide maximum strength with minimum weight by providing alternate load paths so that a failure of one segment will not result in failure of the complete structural component. The materials most commonly used throughout the structure are aluminum, steel, and magnesium alloys. In secondary structural areas and many flight control surfaces, aluminum and fiberglas honeycomb core material is extensively used.

a. The fuselage is a semimonocoque structure with the skin reinforced by circumferential frames and longitudinal stringers. It is composed of four sections of which the forward three sections contain passenger, crew, and cargo compartments and extend from body station 178 to body station 1183. The fourth section (aft) provides support for the engines and empennage. Except for the nose gear wheel well and the cutout which accommodates the center wing box and main landing gear wells, the entire shell between body stations 178 and 1183 is pressurized. The frames at body stations 740 and 870 incorporate the points at which the fuselage is attached to the wing front and rear spars.

b. The wing structure consists of a left and right wing box and a center wing box. The left and right wing boxes are cantilevered from the center wing box and the thickness and chord of each wing tapers towards the tip and sweeps back from the center wing box. The surfaces consist of upper and lower skin panels and front and rear spars. The skin is reinforced by spanwise stringers and the spars are reinforced by vertical stiffeners.

(1) The left and right wing boxes are reinforced by chordwise ribs with the greater portion of their enclosed volume sealed to serve as fuel tanks. They extend from the wing root ribs at WBL 70.5 to the tank end rib at station 760.5. The center wing box is reinforced by a pair of spanwise beams and contains a series of bladder-type fuel cells.

(2) The leading edge of each wing supports three flaps and four slats. The trailing edge of each wing supports an inboard and outboard flap, an inboard and outboard aileron, and seven spoilers.

c. The empennage consists of a vertical fin, adjustable horizontal stabilizer, two elevators and two rudders. The vertical fin structure is a three-spar box with longitudinal stringers to reinforce the skin. The box is reinforced by chordwise ribs.

(1) The horizontal stabilizer is installed across the top of the vertical fin and consists of a complete dual box structure from left to right tip.

(2) The rudders and elevators are dual spar structures with ribs and bonded skin panels. Each rudder has a full length antibalance
* tab constructed of aluminum or fiberglass honeycomb. Each *
elevator has a control tab and five balance panels are hinged to the nose of each elevator.

6. AIRCRAFT STATION DIAGRAMS. The wing, fuselage, and empennage station diagrams included in this document were developed for the B-727 aircraft and are used as a general reference only. Several models of these aircraft were manufactured and have different station locator numbers based on the particular configuration. Since the defective areas generally apply to all models of aircraft, the referenced area can be compared with a similar area and locator on the appropriate station diagram for the particular model aircraft.

7. ABBREVIATIONS USED IN THIS DOCUMENT.

FAR	Federal Aviation Regulation
I/B	Inboard
L/H	Left Hand
MLG	Main Landing Gear
NLG	Nose Landing Gear
O/B	Outboard
P/N	Part Number
R/H	Right Hand
TAT	Total Aircraft Time
TSN	Time Since New
TSO	Time Since Overhaul

8. MAINTENANCE REPORTS. The following is a listing of selected maintenance difficulties experienced, representing examples of reports submitted by air carrier operators. This information may be useful in identifying structural problem areas. It should be noted that this is a partial list and covers only a portion of time in the history of the B-727 series aircraft.

a. Fuselage.

(1) A 4" crack was found in fuselage frame at station 783.95 on the R/H side below the cabin floor. TAT 14,255 hours.

(2) The NLG drag strut support shelf was found to have cracks in the L & R tangs. TAT 14,255 hours.

(3) The aft pressure bulkhead left vertical beam was found cracked at the upper lightening hole. TAT 14,255 hours.

(4) During main base check, the tail skid door link lower attach fitting was found to be cracked, fitting P/N 65-59727-6. TAT 14,882 hours.

(5) A 1" crack was found in the aft lower corner of the NLG drag brace support beam. TAT 14,056 hours.

(6) Corrosion was found at the skin lap at station 665 stringer 28L. TAT 14,056 hours.

(7) A 10" crack was found in the upper vertical "I" beam on the L/H side of the aft entry door. TAT 8,998 hours.

(8) An unscheduled landing was made due to #5 L/H eyebrow window inner panel cracking during cruise, window P/N 5-7176-13. TAT 13,480 hours.

(9) During eddy current inspections, cracks were detected on the L & R sides of the bulkhead flanges at station 740. The cracks were between stringers 18 & 19 and 19 & 20. TAT on the several aircraft concerned ranged from 8,641 hours to 15,444 hours.

(10) During main base inspections, stringers 20 & 21 L & R and 22R at station 294.5 and stringer 20R at station 360 were found cracked. TAT 14,786 hours to 15,610 hours.

(11) Routine inspection disclosed a 2" crack in station 930 L/H fuselage frame and stringer 18A, also cracked skin at station 940. TAT 17,270 hours.

(12) The upper left fuselage skin lap was found bulged at station 900 * and the skin split at stations 990 & 1030 due to corrosion. * TAT 17,482 hours.

(13) Routine scheduled inspection disclosed cracks in the cabin floor beam at station 910. TAT 15,256 hours.

(14) During scheduled inspection, the forward hinge mount bracket on the forward cargo door was found broken and pulled out of the structure. TAT 6,150 hours.

(15) Extreme corrosion was found on main cabin seat track assemblies #3, 5, 6, and 7 between stations 420 and 720. TAT 8,026 hours.

(16) The fuselage frames at both hinge cutouts for the aft cargo door were found cracked. TAT 13,090 hours.

(17) During modification, the following damaged fuselage frames were replaced: stations 480, 500, 520, 540, 560, 580, 600, 600F, 600G, 600H, and 600J. Also replaced damaged skin panel station 420 to F. S. Bulkhead. TAT 30,380 hours.

(18) Fuselage frame station 880 found cracked at stringers #15 L & R. TAT 14,786 hours.

(19) The bulkhead at station 1183 was found to have a $1\frac{1}{2}$" crack on the L/H side and a 2" and 4" crack on the R/H side. TAT 15,852 hours.

(20) During main base check, a crack was found in fuselage frame at station 1203 upper R/H torque box. TAT 14,639 hours.

(21) A 20" tear in the ram air inlet between stations 660 and 680 was found and determined to be a result of excessive corrosion between the skin and strap. TAT 15,450 hours.

(22) Extensive corrosion was found below the floor of the forward cargo compartment from station 480 to 720.

(23) Ultrasonic inspection disclosed severe corrosion along the sides of the ram air splitter vein and around the ram air door actuator rod holes and a 16" crack underneath the splitter vein from station 642 to 658. TAT 15,678 hours.

(24) The NLG collar forward segment was found cracked and the reporting operator attributed the crack to corrosion between the faying surfaces of the collar and bushing. TSN 6,234 hours.

* (25) A 12" crack was found in #1 pylon fitting, P/N 65-18722-3. TAT 4,259 hours. *

b. Wing.

(1) During a main base check, the upper #10 left wing stringer at station 656 was found cracked. TAT 14,536 hours.

* (2) The R/H MLG trunnion support beam, P/N 65-16230-4 (7079-T6 MTL) * has been found cracked. TAT 14877 hours.

(3) During scheduled inspection, the L/H flap O/B carriage support was found broken, P/N 69-39601-1. TAT 14,876 hours.

(4) Routine inspections disclosed six broken lobes on the R/H I/B aileron balance panel forward hinge at a TAT of 14,056 hours and ten broken lobes at a TAT of 15,400 hours. Nineteen forward hinge lobes were found broken on the L/H O/B aileron O/B panel at a TAT of 16,748 hours.

(5) A main base inspection disclosed the R/H wing rib at station 686.5 cracked at the top at stringers #12 and 13 and at the bottom at stringer #6. The rib at station 629 was also cracked at the top at stringer #14. The top stringer #8c station 601 and top stringer #9c at station 686.5 were also cracked. TAT 15,270 hours.

(6) The O/B aileron lockout support assembly was found broken at station 661.25 on the R/H wing. TAT 6,577 hours.

(7) During inspection, corrosion was found at the R/H wing station 422 front spar lower cap. TSO 10,659 hours.

(8) A cracked R/H MLG trunnion forward support wing attach fitting was found during scheduled maintenance check, fitting P/N 69-19296-2. TAT 14,794 hours.

(9) Routine service check disclosed the L/H wing O/B leading edge mid-flap interspar rib cracked in two places at WBL 319. TAT 11,647 hours.

(10) Routine inspection disclosed two cracks in the R/H aileron O/B control rod, P/N 65-23544-1. TAT 6,804 hours. Similar cracks have also been found in the L/H aileron control rod.

(11) A 2 3/4" crack was found in support P/N 65-21640-1 at station 388, L/H I/B flap jackscrew forward attachment. TAT 6,849 hours.

(12) Scheduled inspection disclosed heavy corrosion on R/H wing rear spar lower chord at station 601.5. TAT 20,030 hours.

(13) Ultrasonic inspection disclosed a cracked MLG beam lower left support link pin, P/N 69-14908 at body station 940. The crack was three-fourths way around the circumference of the link pin. TAT 16,604 hours.

(14) On scheduled inspection, found #2, #13 and #14 outboard spoiler actuator support fitting cracked. TAT 13,151 hours.

(15) Routine inspection revealed an 8-inch crack in radius of upper spar cap at station 720 right wing. TAT 14,452 hours.

(16) During inspection found L/H inboard flap drive gear box cracked at three mounting lugs. TAT 15,517 hours.

(17) Found right inboard flap inboard track cracked at mount bolt hole for landing gear support beam.

(18) During inspection found corrosion at R/H W. S. 422 front spar lower cap, vertical tang. TSO 10,659 hours.

(19) No. 7 spoiler actuator rod end failed and rod penetrated flight spoiler. TAT 20,069 hours.

c. Empennage.

(1) Forward hinge lobes on the R/H elevator #1 balance panel were broken. TAT 14,255 hours.

* (2) During overhaul, a crack was found in the center section rear spar forging of the R/H horizontal stabilizer. TAT 14,113 hours. *

(3) The L/H inner flange of the vertical fin stiffener #9 at station 133.8 was found cracked. TAT 10,658 hours.

(4) The #3 and #5 L/H elevator balance panels forward hinge lobes were found broken. Number 3 panel had 29 broken and #5 panel had six broken. TAT 14,056 hours.

(5) A 2½" crack was found in the L/H elevator hinge support at the O/B end of #3 balance panel. TAT 14,056 hours.

(6) A 4" crack in the lower skin panel and a crack in the stiffener were found at station 114 R/H elevator. TAT 14,056 hours.

(7) During routine inspection, the trailing edge rib at station 136.5 R/H horizontal stabilizer was found cracked. TAT 9,244 hours. Cracked trailing edge ribs were also found in the L and R horizontal stabilizer at station 114.97 at a TAT of 5,274 hours.

(8) A 10" crack was detected in the lower L/H elevator skin at the skin at the O/B end of the elevator tab. TAT 5,881 hours. A 2" crack was also found in the R/H elevator lower skin at O/B end of the tab. TAT 5,563 hours.

(9) A crack was found in the front spar web of the vertical fin aft of station 1183. TAT 15,256 hours.

(10) Scheduled inspection disclosed a cracked and broken stringer in the vertical fin R/H side at approximately station 160. TAT 2,159 hours.

(11) Routine inspection disclosed a 1" crack in the R/H horizontal stabilizer rear lower spar vertical leg at station 200. TAT 15,800 hours.

(12) A 1" crack was found in the vertical leg of the R/H horizontal stabilizer lower spar cap at station 135. TAT 15,828 hours.

(13) During scheduled inspection, cracks were found in two elevator hinge support brackets, P/N 65-16931-1 at stations 99.79 and 136.5.

(14) Routine inspection disclosed a 2" crack in elevator hat section skin at station 173.21 and a 3" segment missing at station 99.79. TAT 7,628 hours.

(15) The upper rudder hinge fitting was found cracked at the lower lug, fitting P/N 65-23337-1. TAT 11,647 hours.

(16) The upper rudder tab actuating fitting was found cracked, P/N 65-6244-2. TAT 16,145 hours. On another aircraft, the lower rudder tab rod attach bracket was cracked, P/N 65-17483-7. TAT 6,361.

(17) Three cracks in the O/B panel of the R/H horizontal stabilizer spar and one crack in the I/B panel of the L/H horizontal stabilizer spar were found during routine inspection. TAT 6,706 hours.

(18) The L/H horizontal stabilizer spar flange was found cracked at station 208. TAT 8,816 hours.

* d. Landing Gear.

(1) Inspection found #3 MLG wheel inner half broken. The inner bearing and hub were separated from the wheel half. TSN 3,925 hours.

(2) When lowering landing gear during approach, crew heard loud bang. Inspection after landing revealed the R/H landing gear retract cylinder and walking beam protruding through top of wing. Operator reported probable cause as failure of beam, P/N 65-17658-11. TAT 17,249 hours. Service Bulletin 32-167 describes installation of new steel beam.

(3) During scheduled inspection, the L/H MLG walking beam was found to be cracked at the O/B aft attach lug, P/N 65-17658-11. TAT 9,891 hours. Service Bulletin 32-167 describes installation of new steel beam. *

APPENDIX 1. CORROSION

1. CAUSES OF CORROSION.

   a. Metal corrosion is the deterioration of the metal by chemical or electrochemical attack. Corrosion can take place internally as well as on the surface of the metal. This deterioration may change the smooth surface, weaken the interior, or damage or loosen adjacent parts.

   b. Water or water vapor containing salt and combined with oxygen in the atmosphere produces main source of corrosion in aircraft. Thus, aircraft operating in a marine environment or in areas where the atmosphere contains industrial fumes which are corrosive are particularly susceptible to corrosive attacks. If unchecked, corrosion can cause eventual structural failure.

2. TYPES OF CORROSION. There are two general classifications of corrosion, direct chemical attack and electrochemical attack. In both types, the metal is converted into an oxide, hydroxide, or sulfate. The corrosion process involves the anode which is oxidized and cathode (or the corrosive agent) which is reduced.

   a. Direct chemical attack. Corrosion by direct chemical attack results from direct exposure to caustic liquids or vapors. The anodic and cathodic change occurs at the same point. Direct chemical attack in aircraft structure deposits are caused by (1) spilled battery acid or fumes, (2) residual flux deposits from welds, and (3) trapped caustic cleaning fluids.

   b. Electrochemical attack. An electrochemical attack is similar to the electrolytic reaction in electroplating or in a dry cell battery. The reaction requires a medium, like moisture, capable of conducting electricity. When a metal comes in contact with a corrosive agent (dissimilar metal) and is connected by a liquid path, the metal decays or corrodes. The electrochemical attack is responsible for most forms of corrosion on aircraft structure.

3. FORMS OF CORROSION. There are many forms of corrosion which depend on the metal involved, size, shape, atmospheric conditions and corrosion producing agents.

   a. Surface corrosion. This may be caused by either direct chemical or electrochemical attack. Surface corrosion appears as a general roughening, or pitting of the surface of a metal accompanied by a powdery deposit of corrosion products.

   b. Dissimilar Metal Corrosion. Extensive pitting damage may result from contact between dissimilar metal parts in the presence of a conductor. A galvanic action like electroplating occurs at points of contact when insulation has broken down or was omitted.

c. Intergranular corrosion. The grain boundaries of an alloy are attacked by this type of corrosion. Intergranular corrosion may exist without visible surface evidence. Severe intergranular corrosion may sometimes cause the surface of a metal to "exfoliate." This is a flaking of the metal at the surface caused by pressure of corrosion residual product buildup.

d. Stress corrosion. This type corrosion occurs as the result of the combined effect of tensile stresses and corrosive environment. Stress corrosion is found in most metals. However, it is a particular characteristic of aluminum, certain stainless steels and high strength steels.

e. Fretting corrosion. This occurs when two mating surfaces are subject to relative motion although normally at rest with respect to each other. It is characterized by surface pitting and generation of finely divided debris.

4. FACTORS AFFECTING CORROSION. Many factors affect the speed, cause, type, and seriousness of metal corrosion which include:

a. Climate.

b. Size and type of metal.

c. Foreign material.

5. CORROSION PREVENTION. Corrosion-preventive maintenance includes:

a. An adequate cleaning.

b. Thorough periodic lubrication.

c. Detailed inspection for corrosion and failure of protective systems.

d. Prompt treatment of corrosion and touchup of damaged paint areas.

e. Keeping drainholes free of obstruction.

f. Daily wipedown of exposed critical areas.

g. Sealing of aircraft against water during foul weather and proper ventilation on warm, sunny days.

h. Making maximum use of protective covers on parked aircraft.

APPENDIX 2. STATION CHARTS

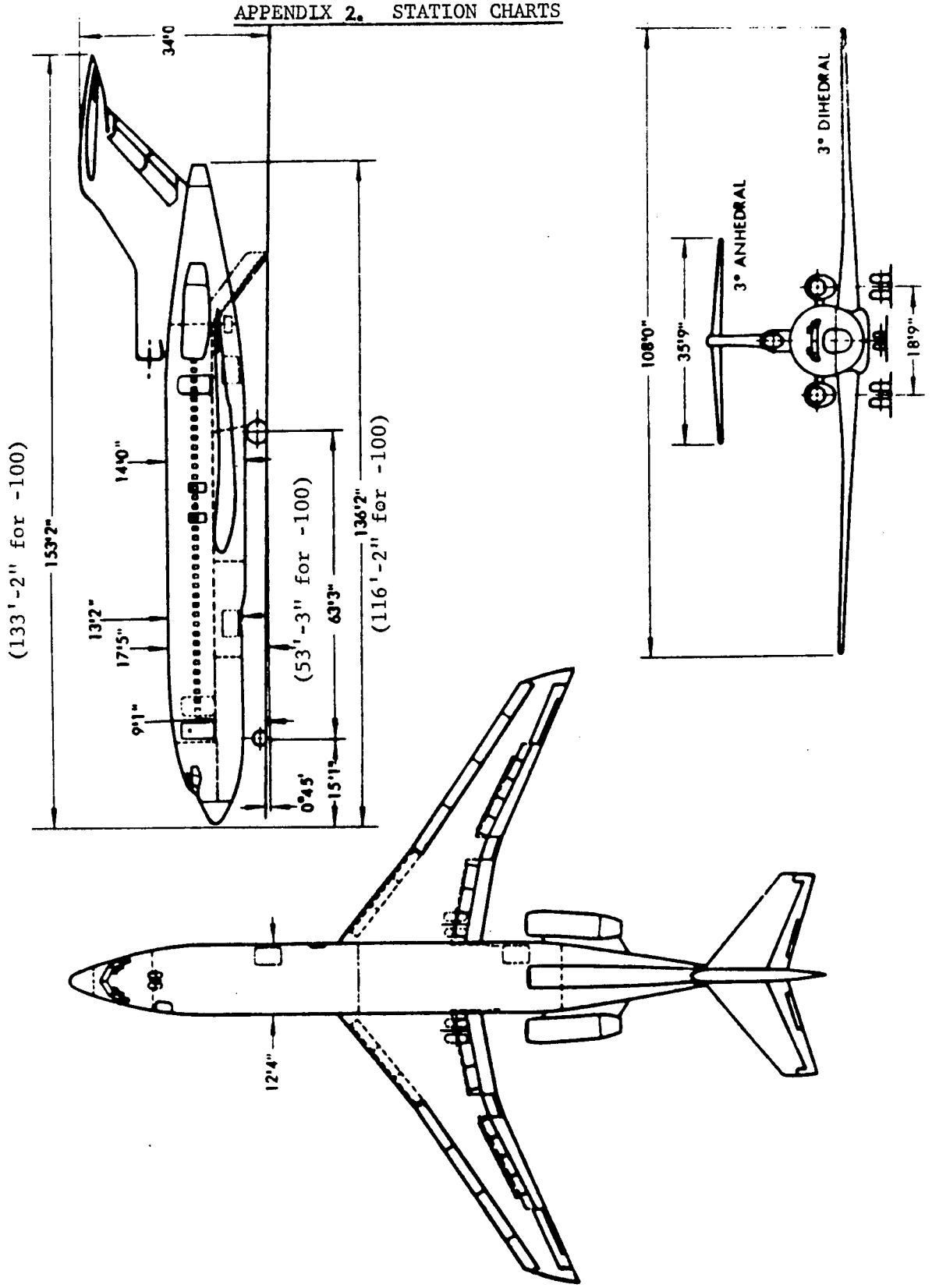

Figure 1. Principal Dimensions

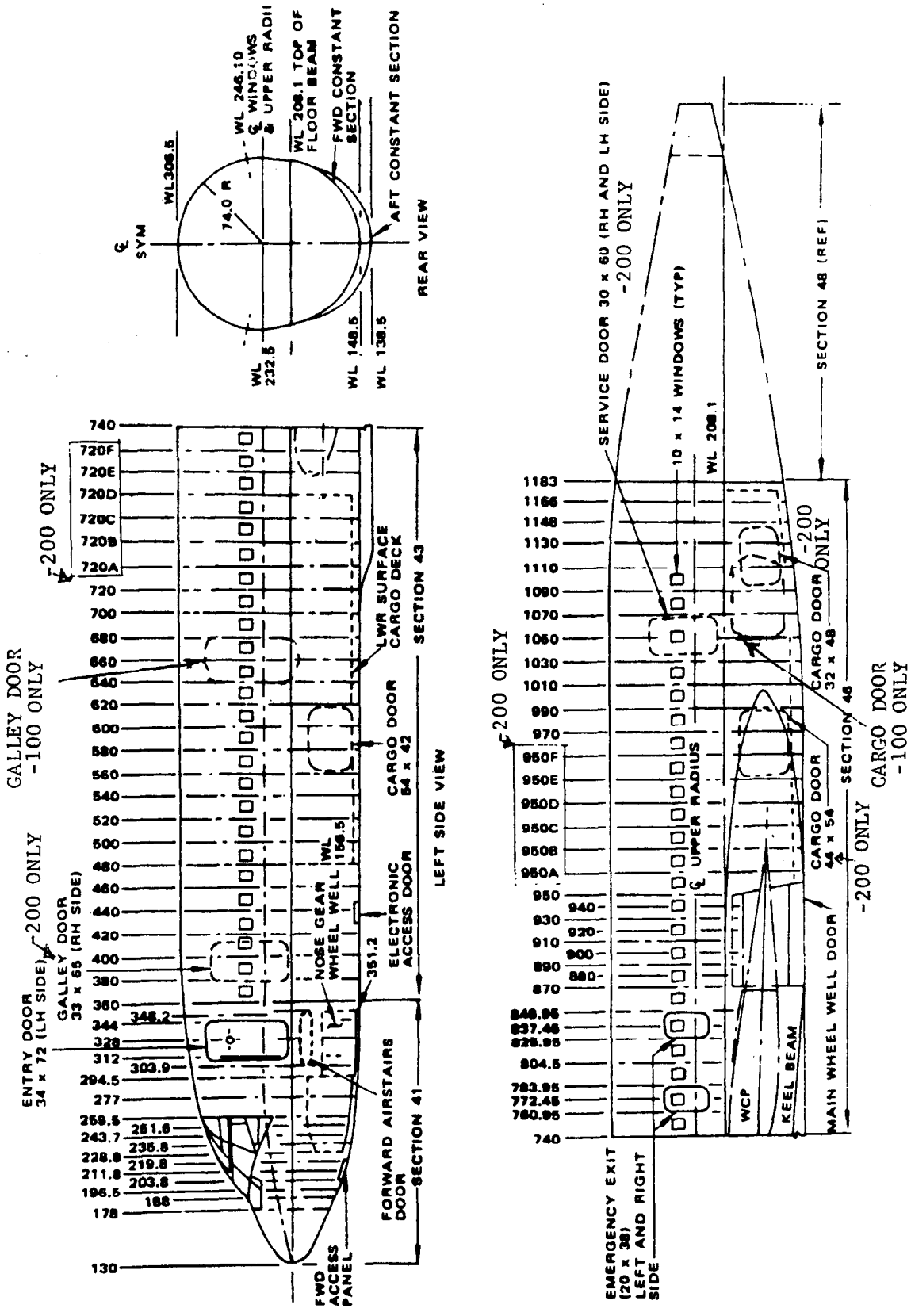

Figure 2. Forward Body Station Diagram

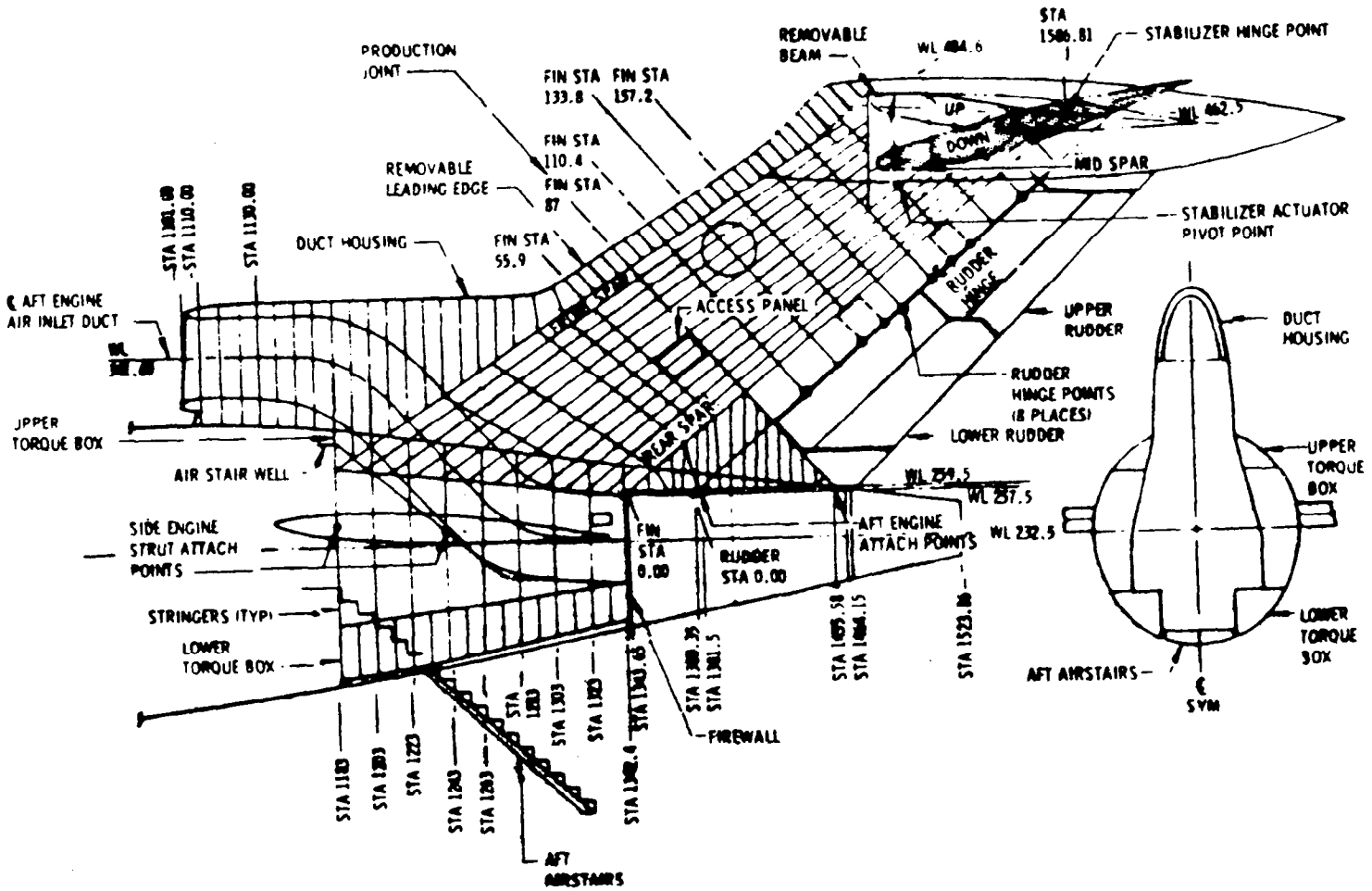
PRODUCTION JOINT
FIN STA 133.8
FIN STA 157.2
FIN STA 110.4
FIN STA 87
FIN STA 55.9
REMOVABLE LEADING EDGE
DUCT HOUSING
REMOVABLE BEAM
WL 484.6
STA 1586.81
STABILIZER HINGE POINT
UP
DOWN
WL 462.5
MID SPAR
STABILIZER ACTUATOR PIVOT POINT
RUDDER HINGE
UPPER RUDDER
ACCESS PANEL
REAR SPAR
RUDDER HINGE POINTS (8 PLACES)
LOWER RUDDER
WL 259.5
WL 257.5
WL 232.5
AFT ENGINE ATTACH POINTS
RUDDER STA 0.00
FIN STA 0.00
FIREWALL
AFT AIRSTAIRS
AFT ENGINE AIR INLET DUCT
UPPER TORQUE BOX
AIR STAIR WELL
SIDE ENGINE STRUT ATTACH POINTS
STRINGERS (TYP)
LOWER TORQUE BOX
DUCT HOUSING
UPPER TORQUE BOX
LOWER TORQUE BOX
AFT AIRSTAIRS
℄ SYM

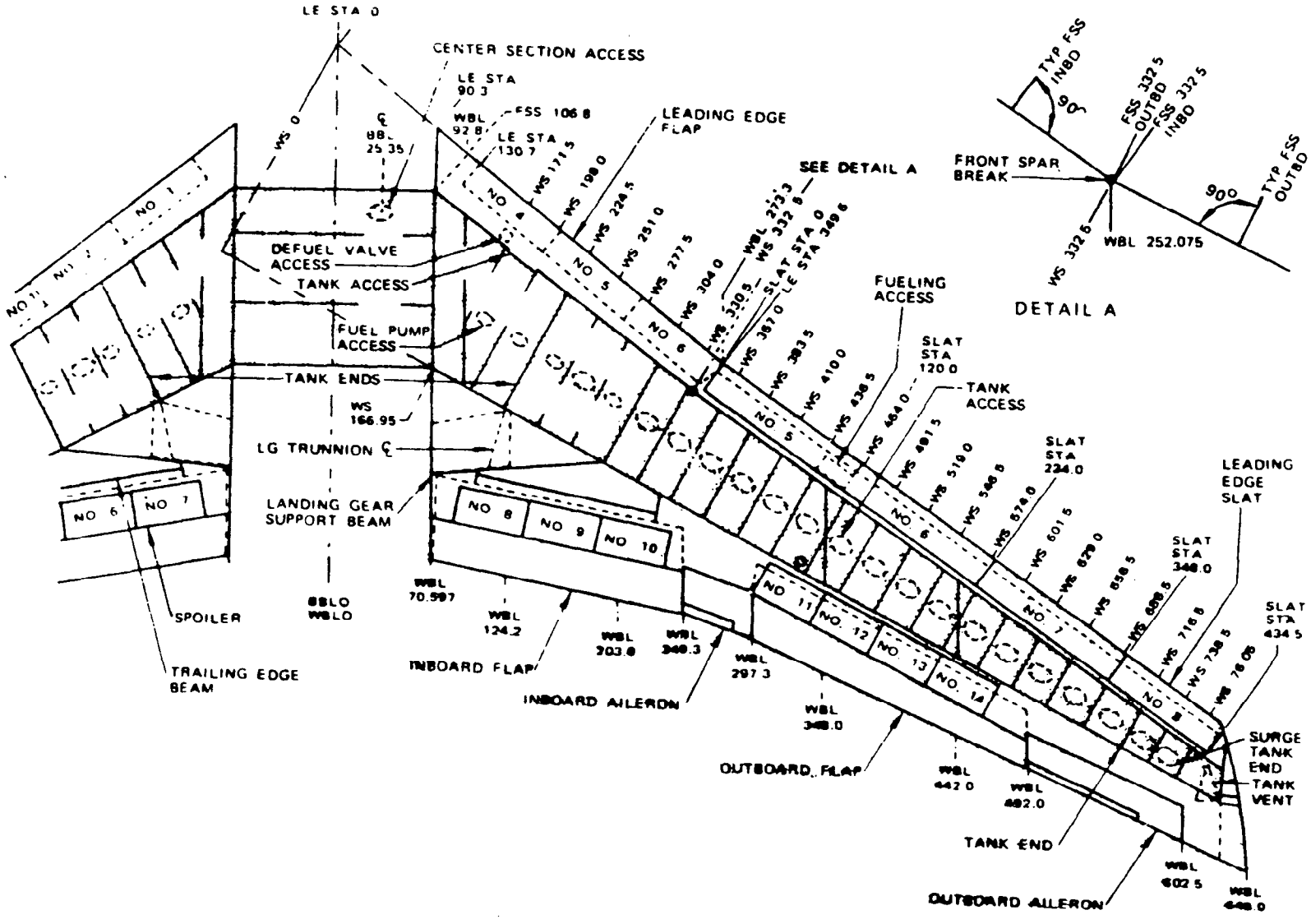

Figure 4. Wing Station Diagram

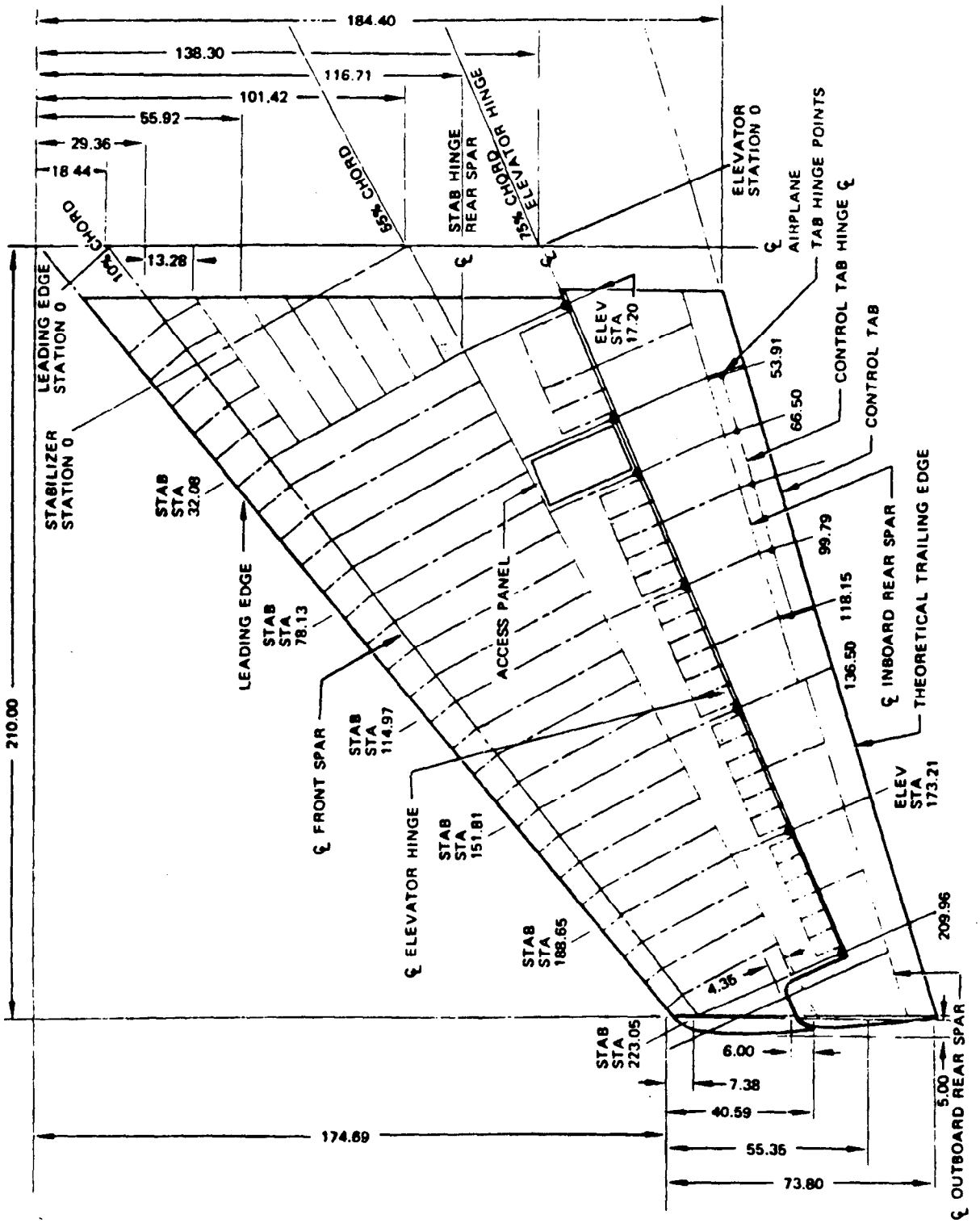

Figure 5. Stabilizer and Elevator Station Diagram

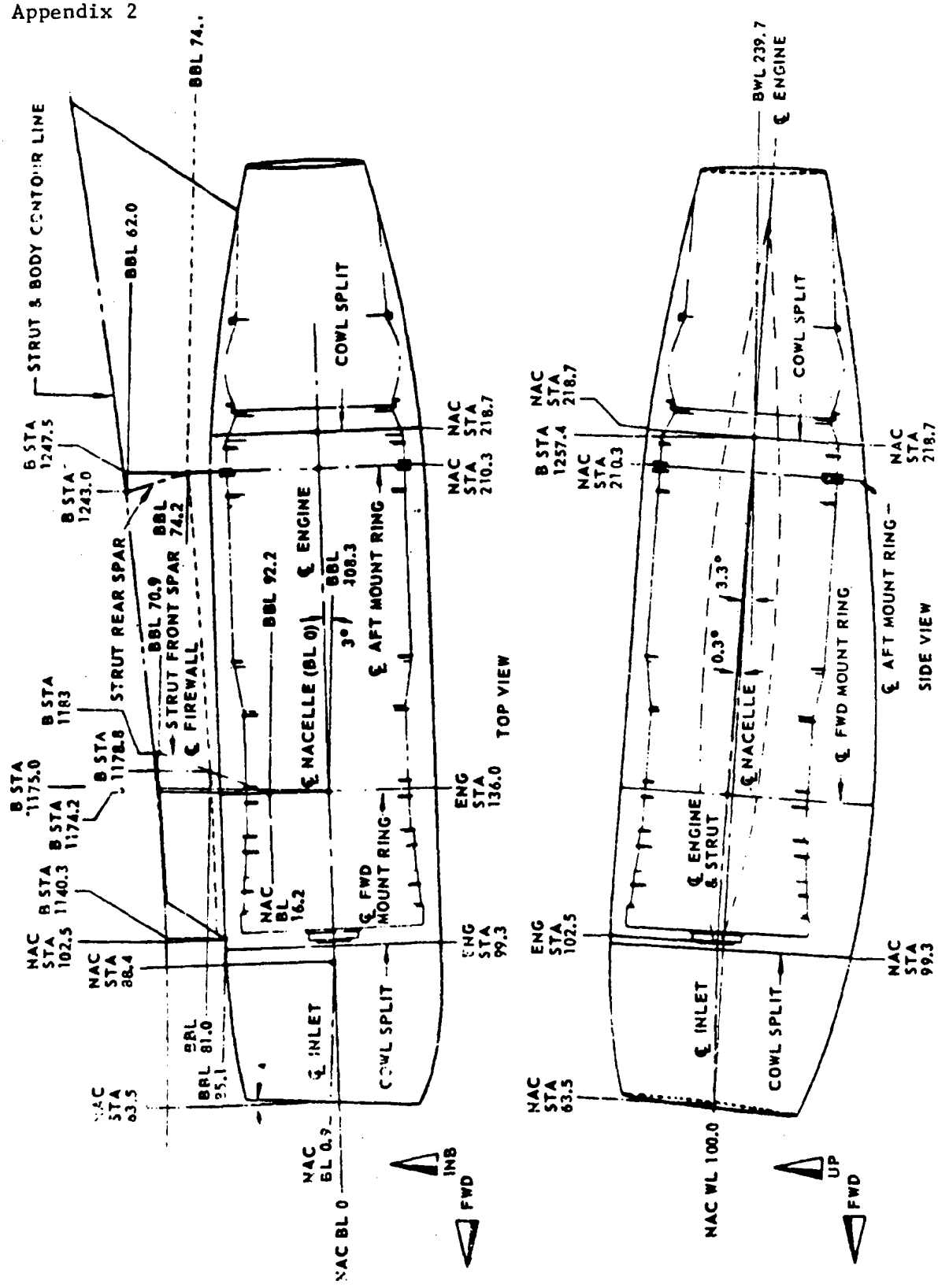

Figure 6. Side Engines Station Diagram

APPENDIX 3. NONDESTRUCTIVE TESTING

1. MAINTENANCE TOOL. Simply stated, nondestructive testing (NDT) is a tool for performing maintenance inspection. This includes utilization of such maintenance tools as X-ray, ultrasonic, magnetic particles, eddy
* current, dye penetrant, and visual with or without magnification. *

   a. Maintenance Inspection. NDT permits maintenance inspection without removing components from aircraft or tearing down complex assemblies. Defects in various aircraft systems which would escape detection through normal visual inspection will be identified by NDT.

   b. Training Required. Special NDT training is desirable to make sure that the technician is capable of operating the equipment and interpreting the results. Also, many States require that an X-ray technician have an approved certificate for use of X-ray in industrial applications. This is to minimize improper use of X-ray equipment with attendant health hazard.

2. METHODS AND APPROACHES FOR DAMAGE DETECTION. Information on the application of NDT methods for the detection of fatigue damage is scattered through literature on metal fatigue and literature on NDT. Few publications deal with this problem specifically. Some publications are limited to laboratory investigations, and the NDT application is conducted under controlled laboratory conditions. Such investigations contribute considerably to available knowledge and provide new or improved NDT methods for field use. However, there is a great difference between what can be done in the laboratory and what can be used in practical applications under field service conditions.

3. NDT METHOD IN FIELD AND SERVICE USE. Most of the NDT methods that are used under field and service conditions are those capable of detecting fatigue cracks of various sizes. These methods are described in books on the subject of nondestructive testing and other publications such as reports, technical papers, and magazine articles. The NDT methods most commonly used in the field and service for fatigue crack detection follow.

4. VISUAL INSPECTION. Visual inspection is the oldest, simplest, cheapest, and most widely used of all NDT methods. The basic principal used in visual inspection is to illuminate the object and examine the surface with the eye.

   a. The surface should be adequately cleaned before being inspected. Visual inspection for detection of fatigue cracks can be improved by aids such as mirrors, lenses, microscopes, periscopes, and telescopes. These devices compensate for limitations of the human eye. Boroscopes permit direct visual inspection of the interior of hollow tubes, chambers, and other internal surfaces.

b. The capability of visual inspection to detect a fatigue crack depends on many factors such as the size and location of the crack, the illumination used, optical aids employed, and skill of the inspector. It is often difficult to detect even a relatively large fatigue crack that is located, for example, at the corner of a groove or that coincides with a machining mark. There are, of course, also limitations on the size of cracks that can be detected by visual inspection, depending on optical aids employed.

5. LIQUID PENETRANT. The liquid penetrant is one of the oldest methods of nondestructive testing and is capable of detecting cracks that may be impossible to find with the most careful visual inspection because either they are too small or because they are difficult to detect due to their location. The principle involves applying to the part surface a liquid penetrant having a low-surface tension and low viscosity. When used on a clean surface that the liquid will wet, the liquid is drawn into the cracks by capillary action. The presence of the liquid in the cracks is revealed when, after wiping the excess liquid from the surface, a developer is applied that acts like a blotter and draws the liquid out.

a. There are two types of liquid penetrants in general use. One contains a dye which usually gives a good color contrast against the selected developer; the other contains dissolved fluorescent material, which makes it readily visible when viewed under a "black" (ultraviolet) light.

b. Liquid penetrant inspection is inexpensive and readily applicable to field use. The surface must be cleaned before inspection and also afterwards to remove the developer.

6. MAGNETIC METHODS. Magnetic inspections are used to detect surface or near surface discontinuities in ferromagnetic materials, and they are well suited for the detection of fatigue cracks.

a. The principle employed here is that once a magnetic field is induced in a material, any cracks and flaws that are present, will perturb or distort that magnetic field. These methods are most sensitive when the crack orientation and the magnetic field direction are perpendicular to each other. When they are parallel, the crack will not be detected.

b. The magnetic particle method is the most frequently used. It consists of three basic steps:

(1) Establishment of the magnetic field in the part to be inspected.

(2) Application of magnetic particles to the surfaces of the part.

(3) Visual examination of the surfaces for indications of fatigue cracks. These indications are provided by the particles being

attracted to the locations of the cracks (or other defects) due to local variations in the magnetic field that are produced.

c. Two classes of magnetic particles are available. The wet method particles use a liquid vehicle; the dry method particles are borne by air. These particles are usually:

(1) Colored to give contrast with the surface being inspected, or

(2) Coated with fluorescent material to make them readily visible under black light. Parts inspected by magnetic particle methods must be cleaned.

7. RADIOGRAPHY. Radiography is a method of nondestructive testing which uses X-ray gamma, beta, or neutron radiation. It is based on the ability of these radioactive sources to penetrate materials. The intensity of the penetrating radioactivity is modified by passage through materials and by defects in the material. These intensity changes are recorded on film as areas of varying density (or darkness) which permits distinguishing flaws and cracks. Obviously, maximum sensitivity occurs when the crack is oriented such that its longest dimension is parallel to the direction of radiation.

a. X-ray radiography has two main advantages; (1) versatility, and (2) sensitivity. The X-ray energy source can be easily adjusted for variations in thickness. It is also adaptable to fluoroscopy and television systems.

b. The advantages of gamma radiography are: (1) portability, and (2) a relatively low cost.Portability comes from the fact that the source is small. This permits its effective use in the field particularly in remote areas. One of the difficulties with the gamma radioactive source is that the source cannot be varied or turned off so that safety precautions must be observed at all times. (X-ray constitutes a health hazard only during operation of the X-ray equipment.)

c. Conventional radiography is firmly established and reasonably easy to understand. One of the original drawbacks was the long time involved in the developing and processing of film. This has been overcome by modern automatic film processing techniques.

d. Interpretation of the processed film is the most important phase of radiography. Adequate tools such as a film illuminator lens and good working conditions should be available to assist the interpreter in detecting cracks in the part displayed on the film.

8. ULTRASONICS. Ultrasonic methods have received wide acceptance in the aviation industry and are particularly useful for determining the integrity of a member of a structure. Basically, sound energy above the audible range is transmitted into a part, and a signal is received and analyzed.

The ultrasonic wave is transmitted and received through transducers, which are placed upon the part to be inspected. The transducer must be properly coupled to the part and is the most critical aspect of the inspection. Good coupling can be achieved by using liquids at the transducer part interface.

a. The ultrasonic wave (or beam) may be evaluated in terms of either transmission or reflection. The receiving transducer may be a separate unit (through transmission) or it may be the same transducer that sent the signal (reflection and resonance). For crack detection, the reflection technique is most commonly used. It permits the determination of the location of the crack wherever it might be within the part and only one transducer on one side of the part is needed. When ultrasonic wave (pulse) is sent into the part, a discontinuity, e.g. a crack, in its path on which it impinges will both absorb and reflect energy. A defect can be recognized by the relative time for return of the reflected energy to the transducer.

b. The ultrasonic methods now available are rapid, economical, sensitive, and can have good accuracy for determining crack extent and position. Equipment is light and portable so that on-site inspections are possible. There are conditions which can limit the usefulness of ultrasonic inspections. These include unfavorable part geometry (such as complexity, contour, and size) orientation of the cracks, and misleading responses which may occasionally be obtained. Also, ultrasonic inspection, as presently practiced, depends upon experience, skill, and judgment of the inspector. He must interpret the crack size and location by the indirect evidence presented by the electronic equipment (oscilloscope). He must be able to distinguish between significant signals and spurious ones.

9. EDDY CURRENT. The eddy current method is a comparatively recent nondestructive testing technique. It is being frequently used for nonmagnetic materials. (When used for magnetic materials, it requires more complex systems.) The principle involved is simple. A coil that is carrying a high-frequency alternating current is brought near an electrical conductor and eddy currents are generated in the conductor. The eddy (or induced) current creates a magnetic field. Flaws, cracks, etc., cause resistance changes within the part. This affects the induced currents and thus, the magnetic field produced by them. Detection and measurement of the magnetic field form the basis of the nondestructive testing.

a. Two types of coils are in common use. One is a circumferential coil through which a part passes. The second is called a probe coil which is placed on the surface of the part to be inspected. Each type coil can be made in a number of designs, depending on the application.

b. Eddy current instruments have various degrees of versatility. Many are portable. Once proven for a specific application, the inspection process is very rapid. Eddy current methods have been used very

successfully for fatigue crack detection. However, eddy current methods are sensitive to many variables that influence the results obtained. Also, signals obtained are sometimes of a comparative nature, and reference standards are needed for interpretation.

AC NO: 20-84
DATE: 22 Jan 73

ADVISORY CIRCULAR

MAINTENANCE INSPECTION NOTES FOR BOEING B-727 SERIES AIRCRAFT

CONSOLIDATED REPRINT

THIS CONSOLIDATED REPRINT INCORPORATES

CHANGES 1 and 2

DEPARTMENT OF TRANSPORTATION
FEDERAL AVIATION ADMINISTRATION