EPA Document #: EPA/600/R-05/049

METHOD 332.0 DETERMINATION OF PERCHLORATE IN DRINKING WATER BY ION CHROMATOGRAPHY WITH SUPPRESSED CONDUCTIVITY AND ELECTROSPRAY IONIZATION MASS SPECTROMETRY

Revision 1.0
March 2005

Elizabeth Hedrick and Thomas Behymer, U.S. EPA, Office of Research and Development
Rosanne Slingsby, Dionex Corporation
David Munch, U.S. EPA, Office of Ground Water and Drinking Water

NATIONAL EXPOSURE RESEARCH LABORATORY
OFFICE OF RESEARCH AND DEVELOPMENT
UNITED STATES ENVIRONMENTAL PROTECTION AGENCY
CINCINNATI, OHIO 45268

METHOD 332.0

DETERMINATION OF PERCHLORATE IN DRINKING WATER BY ION CHROMATOGRAPHY WITH SUPPRESSED CONDUCTIVITY AND ELECTROSPRAY IONIZATION MASS SPECTROMETRY

1. SCOPE AND APPLICATION

1.1 This method is applicable to the identification and quantitation of perchlorate (ClO_4^-) in raw and finished drinking waters. The approach used is ion chromatography with suppressed conductivity and electrospray ionization mass spectrometry (IC-ESI/MS).

Analyte	Chemical Abstract Services Registry Number (CASRN)
Perchlorate	**14797-73-0**

1.2 The ion chromatographic conditions described in this method may be used with a tandem mass spectrometer (MS/MS) detector as described in EPA Method 331.0. Specifically, the IC operational description (Sect. 10) and quality control requirements (Sect. 9) of Method 332.0 may be used in combination with the MS/MS operational description and quality control requirements in Method 331.0.

1.3 The Minimum Reporting Level (MRL) is the lowest analyte concentration that meets the Data Quality Objectives (DQOs) that are developed based upon the intended use of the method. The Lowest Concentration MRL (LCMRL) is the lowest true concentration for which a future recovery is predicted to fall, with 99 percent confidence, between 50 and 150 percent. The method development laboratory's LCMRL for ClO_4^-, as defined in Section 3.13, was 0.10 µg/L using the quantitation ion at *m/z* 101 (Table 5). The procedure used to determine LCMRLs is described elsewhere.[1]

1.4 Laboratories using this method are not required to determine an LCMRL for this method, but must determine a single laboratory MRL using the procedure described in Section 9.2.4.

1.5 Detection limit (DL) is defined as the statistically calculated minimum concentration that can be measured with 99% confidence that the reported value is greater than zero.[2] The DL is compound dependent and is dependent on sample matrix, fortification concentration, and instrument performance. Determining the DL in this method is optional (Sect. 9.2.5). The method development laboratory's DL for ClO_4^- in reagent water was 0.02 µg/L (Table 5).

1.6 The two predominant ClO_4^- ions that occur naturally at a ratio of 3.086:1 are $^{35}Cl^{16}O_4^-$, *m/z* 99, and $^{37}Cl^{16}O_4^-$, *m/z* 101, respectively.[3] Due to fewer mass spectral interferences, the concentration of ClO_4^- using the *m/z* 101 ion is reported. The *m/z* 99/101 area count

ratio and relative retention time are used for confirmation of ClO_4^- in samples. An oxygen-18 (^{18}O) enriched ClO_4^- internal standard is used to improve accuracy and ruggedness of the method.

1.7 This method is intended for use by or under the supervision of analysts with prior experience using ion chromatography and mass spectrometry with electrospray ionization and interpretation of associated data. This method has been developed for raw and finished drinking waters; however, with further method development the basic approach may be suitable for measuring ClO_4^- in other matrices. For example, sample preparation, sample clean-up and the identification of possible interferences would require further study. In addition, the IC-ESI/MS conditions may require optimization. Finally, precision, accuracy and minimum reporting limits would need to be determined for the matrices of interest.

2.0 SUMMARY OF METHOD

2.1 This method describes the instrumentation and procedures necessary to identify and quantify low levels of ClO_4^- in drinking waters using IC-ESI/MS. Drinking water samples are collected using a sterile filtration technique. A small volume of sample is injected into an ion chromatograph. Using an anion exchange column, ClO_4^- is separated from constituent cations and anions in the sample using a potassium hydroxide mobile phase. Due to the use of a non-volatile mobile phase, the eluate from the column is passed through a conductivity suppressor to remove the potassium (K^+) ions of the mobile phase and to remove the analyte counter cations prior to the eluate entering the mass spectrometer. An ^{18}O-enriched $^{35}Cl^{18}O_4^-$ internal standard (*m/z* 107) is used for quantitation to improve accuracy and ruggedness of the method. Identification is made by verifying the relative retention time of the two predominant ClO_4^- ions with respect to the internal standard. Qualitative confirmation of ClO_4^- is made by confirming that the *m/z* 99/101 area count ratio is within a specified range. If these conditions are met, along with passing all other QC requirements defined in Section 9, then the concentration obtained using the *m/z* 101 quantitation ion is reported.

3. DEFINITIONS

3.1 ANALYSIS BATCH - A sequence of samples, which are analyzed within a 30 hour period and include no more than 20 field samples. An Analysis Batch must include all required QC samples, which do not contribute to the maximum field sample total of 20. The required QC samples include:

- Laboratory Reagent Blank (LRB)
- Continuing Calibration Checks (CCCs)
- Laboratory Fortified Blank (LFB)
- Laboratory Fortified Sample Matrix (LFSM)
- Either a Laboratory Duplicate (LD) or a Laboratory Fortified Sample Matrix Duplicate (LFSMD)

3.2 CALIBRATION STANDARD (CAL) - A solution prepared from the secondary dilution standard and internal standard. The CAL solutions are used to calibrate the instrument response with respect to analyte concentration.

3.3 CONTINUING CALIBRATION CHECK (CCC) - A calibration standard containing the method analyte and internal standard, which is analyzed periodically to verify the accuracy of the existing calibration for the method analyte.

3.4 DETECTION LIMIT (DL) - The minimum concentration of an analyte that can be identified, measured and reported with 99% confidence that the analyte concentration is greater than zero. This a statistical determination (Sect. 9.2.5), and accurate quantitation is not expected at this concentration.[2]

3.5 INTERNAL STANDARD (IS) - A pure compound added to all standard solutions and field samples in a known amount. It is used to measure the relative response of the method analyte. The internal standard must be a compound that is not a sample component.

3.6 LABORATORY DUPLICATES (LDs) - Two sample aliquots (LD1 and LD2), taken in the laboratory from a single sample bottle, and analyzed separately with identical procedures. Analyses of LD1 and LD2 indicate precision associated specifically with the laboratory procedures by removing variation contributed from sample collection, preservation and storage procedures.

3.7 LABORATORY FORTIFIED BLANK (LFB) - An aliquot of reagent water or other blank matrix to which known quantities of the method analyte and internal standard are added in the laboratory. The LFB is analyzed exactly like a sample, including preservation procedures, and its purpose is to determine whether the method, inclusive of sample processing, is in control, and whether the laboratory is capable of making accurate and precise measurements.

3.8 LABORATORY FORTIFIED SAMPLE MATRIX (LFSM) - An aliquot of a field sample to which a known quantity of the method analyte and internal standard are added. The LFSM is processed and analyzed exactly like a sample, and its purpose is to determine whether the sample matrix contributes bias to the analytical results. The background concentration of the analyte in the sample matrix must be determined in a separate aliquot and the measured values in the LFSM corrected for background concentrations.

3.9 LABORATORY FORTIFIED SAMPLE MATRIX DUPLICATE (LFSMD) - A second aliquot of the field sample used to prepare the LFSM which is fortified and analyzed identically to the LFSM.

3.10 LABORATORY FORTIFIED SYNTHETIC SAMPLE MATRIX (LFSSM) - An aliquot of the Laboratory Synthetic Sample Matrix Blank (Sect. 3.12) that is fortified with ClO_4^-

and processed like a field sample (Sect. 8). It is used to confirm that there is adequate chromatographic resolution between sulfate and ClO_4^-.

3.11 LABORATORY REAGENT BLANK (LRB) - An aliquot of reagent water or other blank matrix that is treated exactly as a sample including exposure to all filtration equipment, storage containers and internal standards. The LRB is used to determine if the method analyte or other interferences are present in the laboratory environment, the reagents, or apparatus.

3.12 LABORATORY SYNTHETIC SAMPLE MATRIX BLANK (LSSMB) - A solution of 1,000 mg/L each of chloride, sulfate and carbonate (Cl^-, $SO_4^{2-}$and CO_3^{2-}) anions that is processed like a field sample. The LSSMB is a reagent blank that must be analyzed with each LFSSM.

3.13 LOWEST CONCENTRATION MINIMUM REPORTING LEVEL (LCMRL) - The single laboratory LCMRL is the lowest true concentration for which a future recovery is predicted to fall, with 99 percent confidence, between 50 and 150 percent recovery.[1]

3.14 MATERIAL SAFETY DATA SHEET (MSDS) - Written information provided by vendors concerning a chemical's toxicity, health hazards, physical properties, fire, and reactivity data including storage, spill, and handling precautions.

3.15 MINIMUM REPORTING LEVEL (MRL) - The minimum concentration that can be reported as a quantitated value for a target analyte in a sample following analysis. This defined concentration can be no lower than the concentration of the lowest calibration standard for that analyte, and can only be used if acceptable quality control criteria for the analyte at this concentration are met.

3.16 PRIMARY DILUTION STANDARD SOLUTION (PDS) - A solution containing the method analyte prepared in the laboratory from stock standard solutions and diluted as needed to prepare calibration solutions and other needed analyte solutions.

3.17 QUALITY CONTROL SAMPLE (QCS) - A solution containing the method analyte at a known concentration that is obtained from a source external to the laboratory and different from the source of calibration standards. It is used to verify that the standard solution has been properly prepared, and stored to maintain its integrity.

3.18 REAGENT WATER (RW) - Purified water which does not contain any measurable quantity of the method analyte at or above 1/3 the MRL, or interfering compounds that would affect the determination of the method analyte.

3.19 SECONDARY DILUTION STANDARD (SDS) - A dilution made from the primary dilution standard (PDS) that is used to prepare the calibration standards.

3.20 SELECTED ION MONITORING (SIM) - A mass spectrometric technique where only one or a few ions are monitored to improve sensitivity.

3.21 STOCK STANDARD SOLUTION (SSS) - A concentrated solution containing the method analyte that is prepared in the laboratory using assayed reference materials or purchased from a reputable commercial source.

4. INTERFERENCES

4.1 Method interferences may be caused by contaminants in solvents, reagents (including reagent water), sample bottles and caps, and other sample processing hardware that lead to discrete artifacts and/or elevated baselines in the chromatograms. All items such as these must be routinely demonstrated to be free from interferences (less than 1/3 the MRL for the target analyte) under the conditions of the analysis by analyzing LRBs as described in Section 9.3.1. **Subtracting blank values from sample results is not permitted.**

NOTE: The use of low or high density polyethylene plastic is recommended in place of glass when possible. If glassware is used, it should be washed with detergent and tap water and rinsed thoroughly with reagent water since ClO_4^- was found in common lab detergent during method development.

4.2 In anion chromatography, cations are not retained on the analytical column and, in theory, pass through in the void volume. The anions are separated by charge, size and polarizability. As a large polarizable molecule, ClO_4^- elutes later than the common inorganic anions (Cl^-, SO_4^{2-}, CO_3^{2-}, and HCO_3^-). Separation of ClO_4^- from the matrix ions combined with the specificity of mass spectrometry has resulted in a method that minimizes interferences for drinking water matrices. There are, however, the following known conditions or contaminants that, if present, could result in positive or negative bias in the reporting of ClO_4^-.

4.2.1 Direct Chromatographic Co-elution of Contaminants: At sufficiently high concentration, direct chromatographic co-elution of a contaminant with ClO_4^- could result in ionization suppression of one or more of the ions of interest (*m/z* 99, 101, and/or 107). Alternatively, the contaminant could have the same *m/z* as ClO_4^-, or in-source collisionally induced dissociation of a co-eluting contaminant in the ESI interface could produce a fragment ion with the same *m/z* as ClO_4^-. Any of these conditions could lead to a positive or negative bias of ClO_4^- depending on the affected ion.

If a contaminant is present at a concentration detectable by conductivity, a full mass scan on a replicate analysis may reveal the presence and *m/z* of the co-eluting contaminant. Direct chromatographic coelution problems or concentration dependent coelution problems may be solved by achieving adequate chromatographic separation. This may be done by modifying the

eluent strength or modifying the eluent with organic solvents (if compatible with the IC column and suppressor), changing the detection systems (e.g., MS/MS), or selective removal of the interference with sample pretreatment. Sample dilution will only be beneficial if the coelution is a result of column overloading.

High concentrations of polar anions such as pyrophosphate ($P_2O_7^{4-}$), tripolyphosphate ($P_3O_{10}^{5-}$) and thio compounds, including aromatic sulfonates, are potential chromatographic interferants. A 75 mM hydroxide mobile phase concentration was found to elute the polyphosphates well before ClO_4^- without compromising data quality.

4.2.2 Concentration-Dependent Interference by Sulfate (SO_4^{2-}): Of the common anions found in drinking waters (Cl^-, SO_4^{2-}, CO_3^{2-}, HCO_3^-), sulfate can be the most problematic. Sulfate elutes before ClO_4^- on most of the anion chromatography columns currently being used for ClO_4^- analysis; however, it has a tendency to elute broadly, tailing into the retention time of ClO_4^-. Formation of $H^{32}SO_4^-$ (*m/z* 97) and $H^{34}SO_4^-$ (*m/z* 99) are favored in the conductivity suppressor as the pH of the eluate leaving the suppressor becomes strongly acidic. They are also formed in the electrospray ionization interface. In general, the result of high sulfate concentrations was observed to be either (1) an inability to detect the *m/z* 99 ion, whereas the *m/z* 101 ion was still detected, or (2) an area count ratio (*m/z* 99/101) that did not meet the QC requirement (Sect. 9.3.5). If either of these effects are observed, the analyst must evaluate the background counts at *m/z* 99 in the half minute before ClO_4^- elutes. If the background counts are high (approximately 10-20 times higher than the background counts at *m/z* 99 in the first CCC of the Analysis Batch, Sect. 10.4.1), sample dilution or pretreatment to reduce/remove the sulfate is required to meet the *m/z* 99/101 area count ratio requirement for confirmation of ClO_4^- (Sect. 9.3.5). As the column ages and the retention time of ClO_4^- becomes shorter, the analyst might note that the *m/z* 99/101 area count ratio is more severely affected by the presence of high concentrations of sulfate. Column cleaning or replacement is recommended if this occurs.

4.2.3 ESI/MS Detector Inlet Fouling: The effect of ESI/MS detector inlet fouling is deterioration of signal intensity for the three ions monitored in this method (*m/z* 99, 101 and 107). The deterioration can be rapid (after the analysis of one problematic matrix) or it can be gradual. To a large extent, the IS will correct for gradual and minor loss of signal intensity due to ESI/MS inlet fouling. However, continued loss of signal intensity may eventually affect sensitivity to the point that it is no longer possible to detect ClO_4^- at the MRL, and/or the QC criteria for IS area counts will fail (Sect. 9.3.4). Not all mass spectrometers exhibit this problem to the same extent; however, if the problem is observed to be gradual and significant over the course of a week, it may be greatly reduced by using an instrument configuration that bypasses the mass spectrometer until 1.5 to 2 minutes prior to the elution of ClO_4^- (see Figures 1 and 2). This is

because the ions that have the greatest potential for ESI/MS detector inlet fouling elute in the first few minutes after sample injection. For the instrumentation used to collect the data that is presented in this method, bypassing the mass spectrometer until just prior to the elution of ClO_4^- dramatically improved system ruggedness and reduced the need for ESI/MS detector inlet cleaning.

4.2.4 System Carry-over: Carry-over from one analysis may affect the detection of ClO_4^- in a second or subsequent analysis. It can occur when the analysis of a low concentration sample immediately follows the analysis of a high concentration sample. Carry-over from one analysis to a subsequent analysis may occur if using an autosampler or if the injection valve is switched back to the load position too soon after injection of a sample. If ClO_4^- carry-over is discovered in blanks proportional to the concentration of the previously injected standard, the problem must be corrected prior to further analyses.

4.3 Every effort has been made to address known interferences in this method and to inform the analyst regarding interpretation of chromatographic and mass spectrometric data to determine if an interferant is present. There are also mandatory QC requirements that, if failed, should alert the analyst to the possibility of an interferant. Modifications in sample pretreatment, chromatography and instrumentation are allowed to overcome interferences.

NOTE: Although modifications are acceptable, the analyst must demonstrate that the modifications do not introduce any adverse affects on method performance by repeating and passing all the QC criteria described in Section 9.2, in addition to meeting all the ongoing QC requirements. Changes are not permitted in sample collection or preservation (Sect. 8.1).

4.4 The percent of ^{18}O enrichment of the internal standard may vary between standard manufacturers. Poor isotopic enrichment may lead to sample contamination by native $Cl^{16}O_4^-$ (*m/z* 99) in the internal standard. Therefore, it must be demonstrated that the IS does not contain unlabeled ClO_4^- at a concentration $\geq$ 1/3 of the MRL when added at the appropriate concentration to samples (a concentration of 1 µg/L was used during method development). This is initially confirmed during the IDC and is monitored in each Analysis Batch by analysis of the Laboratory Reagent Blank (LRB, Sect. 9.3.1).

5. SAFETY

5.1 The toxicity or carcinogenicity of many of the chemicals used in this method have not been precisely defined; each chemical should be treated as a potential health hazard, and exposure to these chemicals should be minimized. Each laboratory is responsible for maintaining awareness of OSHA regulations regarding safe handling of chemicals used in this method.[4-6] Each laboratory should maintain a file of applicable MSDSs.

5.2 Pure ClO_4^- salts are classified as oxidizers and the potassium hydroxide used in the mobile phase is caustic. Pure standard materials and stock standards of these compounds should be handled with suitable protection to skin and eyes.

6. EQUIPMENT AND SUPPLIES (References to specific brands or catalog numbers are included for illustration only, and do not imply endorsement of the product).

The analytical equipment consists of an ion chromatograph and a mass spectrometer. Figures 1 and 2 show two configurations of the Dionex IC-ESI/MS system that yielded acceptable results during method development. Figure 1 and Table 1 show the configuration and operating conditions used to generate the data presented in this method. Table 2 shows the recommended operating conditions for Metrohm-Peak/Agilent instrumentation. Other instrumentation and configurations are acceptable provided the QC requirements of the method are met.

6.1 IC-ESI/MS SYSTEM - An analytical system consisting of a microbore chromatographic pump, a guard and anion separator column, a six-port injection valve, varying sample loop sizes (50-200 µL), a conductivity suppressor, a conductivity detector and a data acquisition and management system that has been interfaced with the ESI/MS.

6.1.1 CHROMATOGRAPHIC PUMP - 2-mm isocratic IC pump capable of precisely delivering flow rates from 0.01-1.0 mL/min [(Dionex Corporation, Sunnyvale, CA, Model IP25) or an isocratic, metal free, IC pump capable of precisely delivering flow rates from 0.01-5.0 mL/min, (Metrohm-Peak Inc., Houston, TX, Model 818) or equivalent].

6.1.2 ANION TRAP COLUMN - A continuously re-generated, high capacity anion exchange resin column placed before the eluent generator used to remove anions in the RW (Dionex IonPac CR-ATC-2 mm, Part No. 060477 or equivalent).

6.1.3 ELUENT GENERATOR - An eluent generator is optional (Dionex Model EG40 with EGC-KOH or equivalent). Preparation of mobile phase from high purity potassium hydroxide (KOH) is permissible. Frequent preparation from KOH salt may be necessary to maintain a carbonate-free solution.

6.1.4 CHROMATOGRAPHY OVEN - Temperature controlled chromatography oven. The chromatography oven contains the 6-port injection valve, the guard and separator columns, the conductivity suppressor and detector. Temperature maintained at 30 ^{O}C is recommended but not required for this method [(Dionex Model No. LC30) or (Metrohm Advanced IC Separation Center, Metrohm Model No. 820, Part Nos. 2.820.0220 and 2.833.0010) or equivalent].

6.1.5 ANION GUARD COLUMN - A guard column packed with the same material as the separator column. It protects the separator column from particulate matter and compounds that could foul the exchange sites of the separator column

[(Dionex AG16, 2-mm internal diameter (I.D.), Part No. 55379) or (Metrohm ASUPP-4/5 guard, 4-mm I.D., Metrohm Part No. 6.1006.500) or equivalent].

6.1.6 ANION SEPARATOR COLUMN - A 100-250 mm column packed with a solid phase specially engineered to achieve separation of the anions of interest [(Dionex AS16, 2-mm I.D. X 250-mm length, Part No. 55378) or (Metrohm ASUPP5-100, 4-mm I.D. X 100-mm length, Part No. 6.1006.510) or equivalent].

6.1.7 CONDUCTIVITY SUPPRESSOR - An electrolytic suppressor operated with an external source of RW. A chemical conductivity suppressor is acceptable, although sulfuric acid should not be used as the chemical regenerant due to mass spectrometric interferences caused by HSO_4^- at *m/z* 99 [(Dionex Anion Self Regenerating Suppressor ASRS-MS, 2-mm, Part No. 63008) or (Metrohm Advanced IC Separation Center, Metrohm Model No. 820, Part No. 2.820.0220 and 2.833.0010) or equivalent].

6.1.8 CONDUCTIVITY DETECTOR - A flow-through detector with an internal volume that does not introduce analyte band broadening [(Dionex Conductivity Detector, Model CD25A) or (Metrohm Advanced IC Conductivity Detector, Metrohm, Model 819, Part No. 2.819.0010) or equivalent].

6.1.9 SAMPLE LOOPS - 50 to 200 µL size. A 200 µL size was used to generate the data presented in this method. Smaller or larger injection volumes may be used as long as the Initial Demonstration of Capability (Sect. 9.2), and all calibrations and sample analyses are performed using the same injection volume.

6.1.10 DATA SYSTEM - Data management software differs from vendor to vendor and may be recommended by the supplier of the IC or MS. A system that allows control of both the IC and MS is recommended [(Dionex Chromeleon Chromatography Management Software, Version 6.4 MSQ) or (Metrohm ICNet 2.3 data management software and Agilent LCMS Chemstation, Metrohm, v10.02, Part No. G2710AA) or equivalent].

6.1.11 HELIUM - High purity, compressed gas with a pressure of at least 80 psi to activate valves, sparge eluent and deliver water to the suppressor.

6.1.12 MASS SPECTROMETER - MS equipped with an ESI interface. Operated in SIM mode [(Dionex Model MSQ-ELMO, manufactured by Thermo Electron, San Jose, CA) or (Agilent 1100 Series MSD Quad SL, Part No. G1956B, manufactured by Agilent Technologies, Wilmington, DE) or equivalent].

6.1.13 NITROGEN - Compressed gas for ESI operation, 80 psi. The purity should be consistent with the MS manufacturer's recommendations. Due to the high flow

rate (>15 L/min), liquid nitrogen or a nitrogen generator is recommended for long periods of operation.

NOTE: The following instrumentation, used to generate the data presented in this method, is recommended but not required.

6.1.14 AUXILIARY PUMP - Pump capable of precisely delivering flow rates from 0.01 - 1.0 mL/min. This pump is used to deliver continuous liquid flow to the mass spectrometer while the eluate flow from the column is diverted to waste until 1.5 - 2 minutes prior to the elution ClO_4^- (Dionex high performance metering pump, Model No. AXP-MS or equivalent). See Figures 1 and 2 for placement of the pump.

6.1.15 AUXILIARY SIX-PORT VALVE - Electronic, 6-port, rear-loading valve (Rheodyne, LLC, Rohnert Park, CA, Part No. 9126-038 or equivalent). This valve may be placed between the exit of the column and the entrance of the suppressor, as was done for the data reported in this method (Figure 1), or alternatively, it may be placed between the conductivity detector and the MS (Figure 2). In the latter configuration, a 50:50 water:acetonitrile mixture is mixed with the eluate before it enters the MS using a static mixing tee. The flow rate to the MS during the time of ClO_4^- elution in Figure 2 is 0.6 mL/min or 0.3 mL/min in Figure 1. As long as all the QC requirements of the method are met (Sect. 9.2), either configuration is acceptable.

6.1.16 STATIC MIXING TEE - High pressure, microbore, mixing tee. The static mixing tee is only used in the Figure 2 configuration (UpChurch Scientific, Oak Harbor, WA, Part No. U466 or equivalent).

6.1.17 AUTOSAMPLER - Used to automate sample analysis. Minimally, the autosampler should be capable of delivering a volume of sample 10 times the chosen sample loop size [(Dionex, Model AS40) or (Metrohm Advanced Sample Processor, Metrohm, Model 788, Part No. 2.788.0010) or equivalent].

6.2 ANALYTICAL BALANCE - Balance capable of $\pm$0.1 mg accuracy (Mettler-Toledo, Inc., Columbus, OH, Mettler AT200 or equivalent).

6.3 STORAGE BOTTLES - Opaque high density polyethylene (HDPE), 30 mL, 125 mL and 250 mL sizes for storage of standards (Fisher Scientific, Suwanee, GA, Cat. No. 2911974, 2911958 and 2911961 or equivalent).

6.4 SAMPLE CONTAINERS - 125-mL sterile high-density polyethylene (HDPE) bottles (IChem 125-mL sterile HDPE bottle, Fisher Scientific, Suwanee, GA, Cat. No. N411-0125 or equivalent) or disposable single-use, sterile polystyrene, 150 mL, with screw-cap for sterile filtered samples (Fisher Scientific, Suwanee, GA, Part No. 09-761-140 or

equivalent). The latter can be used directly with a sterile vacuum filter unit if not using syringe filtration.

6.5 SAMPLE FILTERS - Sterile, single-use, disposable surfactant-free cellulose acetate (SFCA) 26 mm, 0.2 µm syringe filter (Fisher Scientific, Suwanee, GA, Corning Brand, Part No. 09-754-13 or equivalent). For samples high in particulates, filters with built-in prefilters are available. All samples must be filtered at the time of sample collection.

6.6 SYRINGES - Sterile, single-use, disposable, silicone-free, luer-lok, 20 mL (Fisher Scientific, Suwanee, GA, Target Brand, Part No. 03-377-30 or equivalent).

6.7 SAMPLE PRETREATMENT CARTRIDGES - Single-use, disposable OnGuard-II H cartridges (Dionex, Part No. 057085 or equivalent) used to remove high concentrations of carbonate if it is determined to be an interferant. OnGuard-II Ba^{2+} cartridges (Dionex, Part No. 57093 or equivalent) used to remove high concentrations of sulfate if it is determined to be an interferant. OnGuard-II Ag cartridges (Dionex, Part No. 57089 or equivalent) used to remove high concentrations of chloride if it is determined to be an interferant. The Ba^{2+} pretreatment cartridge is the only one that may be required to meet the QC requirements of this method (Sect.11.6.2)

6.8 MICRO-PIPETTES - 250 µL, 1000 µL and 10 mL sizes with single-use disposable tips (Rainin, Oakland, CA, Part Nos. EP-250, EP-1000, and EP-10 mL or equivalent).

6.9 VIALS - Single use, disposable autosampler vials with filter caps, or other disposable, single use vials with caps having a 10 mL or less capacity to be used for sample preparation.

7. REAGENTS AND STANDARDS

7.1 REAGENTS AND SOLVENTS - Reagent grade or better chemicals should be used. Unless otherwise indicated, it is intended that all reagents shall conform to the specifications of the Committee on Analytical Reagents of the American Chemical Society (ACS), where such specifications are available. Solvents should be HPLC grade or better. Other grades may be used provided it is first determined that the reagent is of sufficiently high purity to permit its use without lessening the quality of the determination.

7.1.1 HIGH PURITY REAGENT WATER (RW) - Purified water which does not contain any measurable quantity of the target analyte or interfering compounds at concentrations $\geq$ 1/3 the MRL for the target analyte. The purity of the water required for this method cannot be overly emphasized. For this work, deionized water was further purified using a bench model Millipore water purification system (Millipore Corp, Billerica, MA, Model No. MilliQ Gradient A10 or equivalent).

7.1.2 ACETONITRILE - ACN, CASRN 75-05-8 (Fisher Scientific, Suwanee, GA, Cat. No. A998-1 or equivalent). ACN is only required if using the IC-ESI/MS configuration presented in Figure 2.

7.1.3 METHANOL - MeOH, CASRN 67-56-1 (Fisher Scientific, Suwanee, GA, Cat. No. A452-1 or equivalent). MeOH is only required if using the Metrohm-Peak instrumentation.

7.1.4 POTASSIUM HYDROXIDE ELUENT - 75 mM (KOH, F.W.= 56.11, CASRN 1310-58-3, 45% (w/w), Certified ACS Grade , or better). 75 mM KOH is prepared by diluting 9.35 g of a 45% (w/w) solution to 1 L with RW. Filter, degas by sonication, or sparge with helium, and pressurize with helium to minimize absorption of carbon dioxide from the atmosphere. If using an IC system equipped with an eluent generator (Sect. 6.1.3), KOH eluent preparation is not necessary.

If using a Metrohm IC system, the recommended eluent is 30 mM NaOH (NaOH, F.W.= 40.0, CASRN 1310-73-2, 50% (w/w), Certified ACS Grade, or better) prepared by diluting 2.4 g of the 50% (w/w) solution to 700 mL of RW. Add 300 mL of MeOH to bring final volume to 1 L. Degas by sonication, or sparge with helium, to minimize absorption of carbon dioxide from the atmosphere.

7.1.5 SODIUM SULFATE - Na_2SO_4, F.W.=142.04, CASRN 7757-82-6 (Fisher Scientific, Suwanee, GA., Cat. No. S421-500 or equivalent).

7.1.6 SODIUM CHLORIDE - NaCl, F.W.=58.44, CASRN 7647-14-5 (Fisher Scientific, Suwanee, GA., Cat. No. S271-500 or equivalent).

7.1.7 SODIUM CARBONATE - Na_2CO_3, F.W.=106, CASRN 497-19-8 (Sigma Aldrich Chemical, St Louis, MO, Cat. No. S6139 or equivalent).

7.2 STANDARD SOLUTIONS - Standard solutions may be prepared from certified, commercially available solutions or from neat compounds. When a compound purity is assayed to be 96% or greater, the weight can be used without correction to calculate the concentration of the stock standard. Solution concentrations listed in this section were used during the development of this method and are included as an example. Unless otherwise noted, all standards should be stored in 125-mL HDPE screw-cap bottles (Sect. 6.3) at 6 ^{O}C or less when not in use. Even though stability times for standard solutions are suggested in the following sections, laboratories should use standard QC practices to determine when their standards need to be replaced.

7.2.1 INTERNAL STANDARD STOCK STANDARD SOLUTION (IS-SSS) - 1,000 mg $Cl^{18}O_4^-$/L. ($NaCl^{18}O_4$, F.W.=130.4, CASRN 7601-89-0, 90% enriched on ^{18}O, 98% pure $NaCl^{18}O_4$, or better, Isotec, Inc., Miamisburg, OH or

equivalent,). A 1,000 mg/L solution of $Cl^{18}O_4^-$ is prepared by dissolving 0.0123 g $NaCl^{18}O_4$ in 10 mL of RW. The solution may be stored in an HDPE screw-cap bottle (Sect. 6.3). The anhydrous $NaCl^{18}O_4$ salt should be stored in a desiccator to minimize absorption of water from the atmosphere. The recommended holding time is one year.

7.2.1.1 INTERNAL STANDARD PRIMARY DILUTION STANDARD - (IS–PDS) - 1.0 mg $Cl^{18}O_4^-$/L. Prepared gravimetrically, using an analytical balance having $\pm$0.1 mg accuracy, by adding 0.1 g (100 µL) of the IS-SSS to 99.9 g of RW in a 125-mL HDPE storage bottle. Alternatively, this dilution may be done volumetrically. The recommended holding time is one year.

7.2.1.2 INTERNAL STANDARD FORTIFICATION SOLUTION - (IS-FS) - 100 µg $Cl^{18}O_4^-$/L. Prepared by adding 10 mL of the IS-PDS to 90 mL of RW in a 125-mL HDPE storage bottle. Alternatively, this dilution may be done by weight using an analytical balance having $\pm$0.1 mg accuracy. The recommended holding time is one year.

NOTE: A commercially prepared internal standard solution may be used. (Dionex Corporation, Part No. 062923 or equivalent).

7.2.2 PERCHLORATE STOCK STANDARD SOLUTION (SSS) - 1,000 mg ClO_4^-/L. ($NaClO_4$, anhydrous, 99% pure grade, or better, F.W.= 122.4, CASRN 7601-89-0, Sigma Aldrich Co., St. Louis, MO, Cat. No. S-1513, or equivalent). A 1,000 mg/L solution of ClO_4^- is prepared by dissolving 0.1231 g of $NaClO_4$ in 100 mL of RW. The solution may be stored in a HDPE screw-cap bottle (Sect. 6.3). The anhydrous $NaClO_4$ salt should be stored in a desiccator to minimize absorption of water from the atmosphere. The recommended holding time is one year.

7.2.2.1 PERCHLORATE PRIMARY DILUTION STANDARD - (PDS) - 1.0 mg ClO_4^-/L. Prepared gravimetrically using an analytical balance having $\pm$0.1 mg accuracy, by adding 0.1 g (100 µL) of the SSS to 99.9 g of RW in a 125-mL HDPE storage bottle. Alternatively, this dilution may be done volumetrically. The recommended holding time is one year.

7.2.2.2 PERCHLORATE FORTIFICATION SOLUTION - (FS) - 100 µg ClO_4^-/L. Prepared by adding 10 mL of the PDS to 90 mL of RW. The solution may be stored in a 125-mL HDPE storage bottle. Alternatively, this dilution may be done by weight using an analytical balance having $\pm$0.1 mg accuracy. The recommended holding time is one year.

7.2.3 CALIBRATION STANDARDS (CAL) - The following guide may be used for preparing 100-mL CAL solutions containing 1.0 µg/L of the IS. The holding time for CAL solutions is one month.

Final CAL Conc. (µg/L)	Volume (mL) FS to add	Volume (mL) IS-FS to add
(LRB) 0	0	1.0
0.1	0.1	1.0
0.2	0.2	1.0
0.5	0.5	1.0
1	1	1.0
5	5	1.0
7	7	1.0
10	10	1.0

7.2.4 LABORATORY SYNTHETIC SAMPLE MATRIX (LSSM) - 1,000 mg/L each of Cl^-, SO_4^{2-}, CO_3^{2-}. Add 1.48 g of Na_2SO_4 (Sect. 7.1.5), 1.65 g of NaCl (Sect. 7.1.6) and 1.77 g of Na_2CO_3 (Sect. 7.1.7) to 1-L volumetric flask and dilute to volume with RW. The recommended holding time is one year.

7.2.5 LABORATORY FORTIFIED SYNTHETIC SAMPLE MATRIX (LFSSM) - Prepare an LFSSM at the mid-level concentration of the calibration curve using the LSSM (Sect 7.2.4). The LFSSM must contain the IS at the same concentration as the CAL standards. The holding time is one month.

8. SAMPLE COLLECTION, PRESERVATION AND STORAGE

8.1 SAMPLE COLLECTION

8.1.1 Grab samples must be collected in accordance with conventional sampling practices.[7]

8.1.2 When sampling from a cold water tap, open the tap and allow the system to flush until the water temperature has stabilized (usually approximately 3 to 5 minutes). Collect a representative sample from the flowing system using a beaker of appropriate size. Use this bulk sample to generate individual samples as needed. A volume of at least 20 mL is required for each individual sample.

8.1.3 When sampling from an open body of water, fill a beaker with water sampled from a representative area. Use this bulk sample to generate individual samples as needed. A volume of at least 20 mL is required for each individual sample.

8.1.4 Once representative samples are obtained, they must be filtered to remove any native microorganisms. Perchlorate is known to be susceptible to microbial degradation by anaerobic bacteria.[8] Samples are filtered to remove microbes and stored with headspace to minimize the possibility that anaerobic conditions develop during storage. At a minimum, leave the top one third of the sample bottle empty.

8.1.4.1 Remove a sample syringe (Sect. 6.6) from its package and draw up 20 mL of the bulk sample. Remove a sterile sample filter (Sect. 6.5) from its package without touching the exit Luer connection. Connect the filter to the syringe making sure that no water from the syringe drops on the exterior of the filter. For samples high in particulates, pre-filtration using a sterile filter (0.45 - 10 µm) may help to prevent clogging or rupture of the 0.2 µm filter. Open a sterile sample container (Sect. 6.4) without touching the interior. Using gentle pressure, pass the sample through the filter into the sample container, directing the first milliliter of sample to waste. During this process do not let the syringe or filter make contact with the sample container. Following filtration, seal the sample container tightly, label and prepare the container for shipment. Syringes and filters are single use items and must be discarded after each sample.

8.2 SAMPLE SHIPMENT AND STORAGE - Samples must be chilled during shipment and must not exceed 10 ˚C during the first 48 hours after collection. Samples should be confirmed to be at or below 10 ˚C when they are received at the laboratory. Samples stored in the lab must be held at or below 6 ˚C until analysis, but should not be frozen.

8.3 SAMPLE HOLDING TIMES - Samples should be analyzed as soon as possible. Samples that are collected and stored as described in Sections 8.1 and 8.2 may be held for a maximum of 28 days.

9. QUALITY CONTROL

9.1 QC requirements include the Initial Demonstration of Capability and ongoing QC requirements that must be met when preparing and analyzing field samples. This section describes each QC parameter, their required frequency, and the performance criteria that must be met in order to meet EPA quality objectives. The QC criteria discussed in the following sections are summarized in Section 17, Tables 7 and 8. These QC requirements are considered the minimum acceptable QC criteria. Laboratories are encouraged to institute additional QC practices to meet their specific needs.

9.1.1 METHOD MODIFICATIONS - The analyst is permitted to modify IC columns, mobile phases, chromatographic and ESI/MS conditions. Each time such method modifications are made, the analyst must repeat the IDC procedures in Section 9.2.

9.2 INITIAL DEMONSTRATION OF CAPABILITY (IDC) - The IDC must be successfully performed prior to analyzing any field samples. Prior to conducting the IDC, the analyst must first meet the calibration requirements of Section 10. Requirements for the initial demonstration of laboratory capability are described in the following sections and are summarized in Table 7.

9.2.1 DEMONSTRATION OF LOW SYSTEM BACKGROUND - Before any samples are analyzed, or at any time that new reagents, labware or instrumentation are used, it must be demonstrated that laboratory reagent blanks are reasonably free of any contaminants that would prevent the determination of ClO_4^- and that the criteria of Section 9.3.1 are met. The LRB and LSSMB must be filtered using the same sample collection devices that are used for field samples (Sect. 8.1.4.1).

9.2.1.1 Concentration dependent carry-over is manifest by signals in samples that increase proportionally to the concentration of the previously injected sample. Analysis of a blank RW sample must be performed after the highest CAL standard to assess if carry-over has occurred. This type of blank is not the same as an LRB in that it is not filtered or processed as a sample. If there is system carry-over, the source can often be traced to the use of an autosampler, injection valve problems or an excess of tubing between the IC and/or MS components. The results for this sample must meet the criteria outlined in Section 9.3.1. System carry-over should be eliminated, to the extent possible, by determining the source of the problem and taking corrective action.

9.2.2 DEMONSTRATION OF PRECISION - Prepare and analyze 7 replicate LFBs and 7 replicate LFSSMs fortified near the midrange of the Initial Calibration curve. All samples must be fortified and processed using the sample collection devices described in Section 8.1.4.1. The relative standard deviation (RSD) of the measured concentrations at *m/z* 101 of the replicate analyses must be $\leq$ 20 percent for both LFB and LFSSM. Calculate %RSD using the equation below:

$$\%RSD = \frac{\text{standard deviation of measured concentrations}}{\text{average measured concentration}} \times 100$$

9.2.3 DEMONSTRATION OF ACCURACY - Using the same set of replicate data generated for Section 9.2.2, calculate the average percent recovery. The average recovery must be within 80-120% for both the LFB and the LFSSM data. Calculate percent recovery (%R) using the following equation:

$$\%R = \frac{\text{average measured concentration}}{\text{fortification concentration}} \times 100$$

9.2.4 MINIMUM REPORTING LEVEL (MRL) CONFIRMATION - Select a target concentration for the MRL based on the intended use of the method. Establish an Initial Calibration following the procedure outlined in Section 10.3. The lowest calibration standard used to establish the Initial Calibration in Section 10.3 (as well as the low-level CCC) must be at or below the concentration of the target MRL. Establishing the MRL concentration too low may cause repeated failure of on-going QC requirements. Confirm the targeted MRL following the procedure outlined below.

9.2.4.1 Prepare and analyze seven replicate LFBs at the target MRL concentration. All samples must be processed using the sample collection devices described in Section 8.1.4.1. Calculate the mean (*Mean*) and standard deviation for these replicates using the *m/z* 101 ion. Determine the Half Range for the prediction interval of results (HR_{PIR}) using the equation below:

$$HR_{PIR} = 3.963 \times S$$

where,

S is the standard deviation, and 3.963 is a constant value for seven replicates.

9.2.4.2 Confirm that the upper and lower limits for the Prediction Interval of Results ($PIR = Mean \pm HR_{PIR}$) meet the upper and lower recovery limits as shown below:

The Upper PIR Limit must be $\leq$ 150% recovery.

$$\frac{Mean + HR_{PIR}}{Fortified\ Concentration} \times 100 \leq 150\%$$

The Lower PIR Limit must be $\geq$ 50% recovery.

$$\frac{Mean - HR_{PIR}}{Fortified\ Concentration} \times 100 \geq 50\%$$

9.2.4.3 The target MRL is validated if both the Upper and Lower PIR Limits meet the criteria described above. If these criteria are not met, the MRL has been set too low and must be determined again at a higher concentration.

9.2.5 DETECTION LIMIT DETERMINATION *(optional) - While DL determination is not a specific requirement of this method, it may be required by various regulatory bodies associated with compliance monitoring. It is the responsibility of the laboratory to determine if DL determination is required based on the intended use of the data.*

Prepare and analyze at least seven replicate LFBs at a concentration estimated to be near the Detection Limit over at least 3 days using the procedure described in Section 11. This fortification level may be estimated by selecting a concentration with a signal of 2-5 times the noise level.

NOTE: If an MRL confirmation data set meets these requirements, a DL may be calculated from the MRL confirmation data, and no additional analyses are necessary.

Calculate the DL using the equation:

$$DL = S * t_{(n-1,\ 1-alpha\ =\ 0.99)}$$

where,
$t_{(n-1,1-alpha = 0.99)}$ = Student's t for the 99% confidence level with n-1 degrees of freedom. Student's t = 3.143 for n = 7.
n = number of replicates.
S = standard deviation of replicate analyses.

NOTE: Do not subtract blank values when performing MRL or DL calculations.

9.3 ONGOING REQUIREMENTS - This section summarizes the ongoing QC criteria that must be followed when processing and analyzing field samples. Table 8 summarizes ongoing QC requirements.

9.3.1 LABORATORY REAGENT BLANK (LRB) - An LRB is analyzed during the IDC and is required with each Analysis Batch (Sect. 3.1) to confirm that background contaminants are not interfering with the identification or quantitation of the method analyte. If the LRB produces a peak within the retention time window of the analyte that would prevent the determination of the method analyte, determine the source of contamination and eliminate the interference before processing samples. The LRB must contain the IS at the same concentration used to fortify all field samples and CAL standards and must be processed (i.e., sterile filtration) as described in Section 8.1.4.1. Perchlorate

or other interferences in the LRB must be < 1/3 the MRL. If this criterion is not met, then all data must be considered invalid for all samples in the Analysis Batch.

NOTE: If samples are collected using devices that have not been previously evaluated by the laboratory, duplicates of the sample collection devices must be sent with the samples so an LRB (and an LFB) may be processed in the laboratory.

NOTE: Although quantitative data below the MRL may not be reliably accurate enough for data reporting, such data is useful in determining the magnitude of a background interference. Therefore, blank contamination levels may be estimated by extrapolation when the concentration is below the lowest calibration standard

9.3.2 CONTINUING CALIBRATION CHECK (CCC) - CCCs are analyzed at the beginning of each Analysis Batch, after every ten field samples, and at the end of the Analysis Batch. See Section 10.4 for concentration requirements and acceptance criteria.

9.3.3 LABORATORY FORTIFIED BLANK (LFB) - An LFB is required with each Analysis Batch. The fortified concentration of the LFB must be rotated between low, medium, and high concentrations from batch to batch. The low concentration LFB must be as near as practical to the MRL. Similarly, the high concentration LFB should be near the high end of the calibration range established during the Initial Calibration (Sect. 10.3). Results of LFBs fortified at concentrations ≤ the MRL must be recovered within 50-150% of the true value. Results from the analysis at any other concentration must be recovered within 80-120% of the true value. If the LFB results do not meet these criteria, then all data must be considered invalid for all field samples in the Analysis Batch.

NOTE: LFBs must be processed in the same manner as field samples including all sample preservation and pretreatment requirements (i.e., sterile filtration) as described in Section 8.1.4.1.

LFB Fortified Concentration Range	LFB Recovery Limits
≤ MRL	50 - 150%
>MRL to highest calibration standard	80 - 120%

9.3.4 INTERNAL STANDARD (IS) – The analyst must monitor the peak area of the internal standard in all injections during each Analysis Batch. The IS response (as indicated by peak area) for any chromatographic run must not deviate by

more than ±30 percent from the area counts measured in the first CCC of the Analysis Batch (Sect. 10.4.1). If the IS area counts do not meet this criterion, inject a second aliquot of the sample as part of the same or new Analysis Batch within the holding time of the sample.

9.3.4.1 If the reinjected aliquot produces an acceptable IS response, report results for that aliquot.

9.3.4.2 If the IS area counts of the reinjected aliquot still do not meet the IS criterion, check the IS area of the most recent CCC. If the IS criterion is met in the CCC but not the sample, report the sample results as "suspect matrix".

9.3.4.3 If the IS area criterion is not met in both the sample and the CCC, instrument maintenance, such as cleaning of the MS sample cone, may be necessary. Once the analyst has re-established proper operating conditions, the sample, or affected samples, must be reanalyzed provided that they are still within their holding times.

9.3.5 AREA COUNT RATIO (*m/z* 99/101) ACCEPTANCE CRITERIA - All CAL standards, QC samples and field samples must meet the *m/z* 99/101 area count ratio requirement for confirmation of ClO_4^-. The measured ratio must fall within ±25% (2.31-3.85). Area count ratios that fall outside this range due to sulfate interference must be diluted and/or pretreated with barium form pretreatment cartridges to remove the sulfate to a level that allows better integration of the ClO_4^- peak at *m/z* 99 (Sect. 11.6.2), and thus, better *m/z* 99/101 area count ratios for confirmation. If a CAL standard, CCC or LFB fails the area count ratio acceptance criteria, there may be column, suppressor or instrumental problems. The source of the problem must be identified and corrected before further analysis of samples.

9.3.6 RELATIVE RETENTION TIME ACCEPTANCE CRITERIA - Since the $Cl^{18}O_4^-$ IS has the same retention time as naturally occurring ClO_4^-, the retention time ratio of *m/z* 99/107 and *m/z* 101/107 in samples must be within 0.98 - 1.02 (±2% of the ideal ratio of 1) for confirmation of ClO_4^- in a sample. Use the equation below to determine the relative retention time:

$$\text{Relative Retention Time} = \frac{\text{retention time of } m/z \text{ 99 or } m/z \text{ 101 ion}}{\text{retention time of } m/z \text{ 107 IS ion}}$$

9.3.7 LABORATORY FORTIFIED SAMPLE MATRIX (LFSM) - Analysis of an LFSM (Sect. 3.8) is required in each Analysis Batch and is used to determine that the sample matrix does not adversely affect method accuracy. If a variety of different sample matrices are analyzed regularly, for example drinking water

from groundwater and surface water sources, performance data should be collected for each source. Over time, LFSM data should be documented for all routine sample sources for the laboratory.

9.3.7.1 Within each Analysis Batch, a minimum of one field sample is fortified as an LFSM for every 20 samples analyzed. The LFSM is prepared by fortifying a sample with an appropriate amount of the FS (Sect. 7.2.2.2). Select a fortification concentration that is greater than or equal to the native background concentration, if known. Selecting a duplicate aliquot of a sample that has already been analyzed aids in the selection of an appropriate fortification level. If this is not possible, use historical data and rotate through low, medium and high calibration concentrations when selecting a fortifying concentration.

9.3.7.2 Calculate the recovery (%R) for the analyte using the following equation:

$$\%R = \frac{(A - B)}{C} \times 100$$

where,

A = measured concentration in fortified sample
B = measured background concentration in an unfortified aliquot of the same sample
C = fortification concentration

9.3.7.3 Recoveries for LFSM samples should be 80-120%. Greater variability may be observed when LFSM samples have ClO_4^- concentrations $\leq$ the MRL. At these concentrations, LFSM sample recovery should be 50-150%. If the accuracy of ClO_4^- falls outside the designated range, and the laboratory performance is shown to be in control in the CCCs, the recovery is judged to be matrix biased. The result for ClO_4^- in the unfortified sample should be labeled "suspect matrix" to inform the data user that the results are suspect due to matrix effects.

NOTE: A high concentration of sulfate is a known interferant that may cause the sample to fail the *m/z* 99/101 area count ratio criteria (Sect. 9.3.5). In that case, the sample must be diluted or pretreated to reduce/remove the sulfate to an acceptable level. Refer to Section 11.6 for required remedial action.

NOTE: Field samples that have detectable native ClO_4^- concentrations below the MRL that are fortified at concentrations at or near the MRL should be corrected for the native levels to obtain more accurate results. This is the only case where background subtraction of results below the MRL is permitted.

9.3.8 LABORATORY DUPLICATE OR LABORATORY FORTIFIED SAMPLE MATRIX DUPLICATE (LD or LFSMD) - Within each Analysis Batch, a minimum of one Laboratory Duplicate (LD) or Laboratory Fortified Sample Matrix Duplicate (LFSMD) must be analyzed. Laboratory Duplicates check the precision associated with laboratory procedures. If ClO_4^- is not routinely observed in field samples, a LFSMD should be analyzed rather than a LD.

9.3.8.1 Calculate the relative percent difference (RPD) for duplicate measured concentrations (LD1 and LD2) using the equation:

$$RPD = \frac{|LD1 - LD2|}{(LD1 + LD2)/2} X100$$

9.3.8.2 If an LFSMD is analyzed instead of a LD, calculate the relative percent difference (RPD) for duplicate concentrations of the LFSMs (LFSM and LFSMD) using the equation:

$$RPD = \frac{|LFSM - LFSMD|}{(LFSM + LFSMD)/2} X100$$

9.3.8.3 The RPD acceptance criteria for LDs and duplicate LFSMs are listed in the table below. If the RPD is not within the control, but the laboratory performance is shown to meet the acceptance criteria in the LFB, the recovery problem is judged to be matrix related. The result for the unfortified sample is labeled "suspect matrix" to inform the data user that the results are suspect due to matrix effects.

Concentration Range	RPD Acceptance Criteria
≤ 2 X MRL	≤50%
> 2 X MRL to highest calibration standard	≤20%

9.4 QUARTERLY INSTRUMENT PERFORMANCE CHECK USING THE LSSMB AND LFSSM - Analysis of an LFSSM (Sect. 3.10) must be performed at least quarterly to assess instrumental performance with respect to samples high in common anions. An LFSSM fortified at the mid-range of the calibration curve must be processed and analyzed as a sample along with an LSSMB (Sect. 3.12). **Both solutions must be from the same stock of LSSM.** Results for the LSSMB should meet the criterion set forth in Sect. 9.3.1 for LRB contamination. If the LSSMB contains ClO_4^- at a concentration ≥1/3 the MRL, then the source of the contamination should be identified and corrected. The LFSSM should meet the criteria set forth in Sect. 9.3.3. If the LFSSM does not

meet the QC acceptance criteria for LFB recovery or if the criteria of Sections 9.3.4 - 9.3.6 fail, instrument maintenance such as column or suppressor cleaning is recommended.

10. CALIBRATION AND STANDARDIZATION

10.1 Demonstration and documentation of acceptable MS mass calibration and an Initial Calibration are required before any samples are analyzed. Once the Initial Calibration is successful, CCCs are required at the beginning and end of an Analysis Batch and after every tenth field sample. Although not required, it is recommended that the Initial Calibration be repeated and the mass calibration verified when instrument modifications (column or suppressor replacement) or maintenance (ESI/MS detector inlet cleaning) are performed.

NOTE: CAL solutions and CCCs are not processed with the sample collection or pretreatment devices. This step must be omitted for the CALs and CCCs to identify potential losses associated with the sample filtration, collection or pretreatment devices.

10.2 MASS CALIBRATION AND INSTRUMENT OPTIMIZATION - MS resolution must be 1 amu or better. It is recommended that the analyst contact the instrument manufacturer regarding appropriate mass calibration standards. The user should be aware that many ESI/MS instruments are designed to analyze macromolecules having large *m/z* ratios. As a result, many ESI/MS calibration procedures are designed to cover the full scanning range of the instrument. Since this method uses the lower portion of the mass range, it may be necessary to use mass calibration compounds of lower *m/z* ratios to achieve a better mass calibration for low *m/z* ions like ClO_4^-. For the instrumentation used during this method development, a sodium iodide solution was used as a calibration compound. After the mass calibration has been performed, the analyst must check mass accuracy for ClO_4^- by performing a simple experiment. Prepare a high CAL standard containing equal amounts of ClO_4^- and the IS. While the CAL standard is being infused, scan over the range of 95 - 115 amu and verify that the ClO_4^- peaks are symmetric about *m/z* 99, 101 and 107. (There will also be peaks at *m/z* 103, 105 and 109 from the internal standard ClO_4^- ions that have varying numbers of ^{18}O atoms.) If the peaks are not symmetric about the mass assignments (i.e., 99 ± 0.3, 101 ± 0.3 and 107 ± 0.3), then a new mass calibration of the MS, or other instrument maintenance according to the manufacturer's recommendations, should be performed.

10.2.1 OPTIMIZING MS PARAMETERS - MS instruments have a large number of parameters that may be varied to achieve optimal signal to noise. Due to differences in MS design, the recommendations of the instrument manufacturer should be followed when tuning the instrument. MS conditions may be established by infusing a solution of ClO_4^-, at the same flow rate to be used for sample analysis, while the analyst optimizes the MS parameters. The cone voltage determined to be optimal for the instrumentation used in this method may be adjusted for different MS systems, if necessary, to yield the highest

counts for ClO_4^- at *m/z* 99 while minimizing in-source collisionally induced dissociation with subsequent formation of ClO_3^- (*m/z* 83).

10.2.2 INSTRUMENT CONDITIONS - Suggested operating conditions are listed in Table 1 for Dionex instrumentation and in Table 2 for Metrohm-Peak instrumentation. Conditions different from those described may be used if the QC criteria in Section 9.2 are met. Different conditions include alternate IC columns, mobile phases and MS conditions.

10.3 INITIAL CALIBRATION - For the data presented in this method, daily calibrations were performed using the internal standardization calibration technique; however, it is permissible to perform an Initial Calibration with daily calibration verification using CCCs as described in Sections 10.4.1 and 10.4.2. Calibrations must be performed using peak area (dependent variable) versus concentration (independent variable). Peak height versus concentration is not permitted.

10.3.1 CALIBRATION SOLUTIONS - Prepare a set of at least five CAL standards as described in Section 7.2.3. The lowest concentration of the calibration standard must be at or below the MRL, which will depend on system sensitivity and intended use of the method. The target MRL must be confirmed using the procedure outlined in Section 9.2.4 after establishing the Initial Calibration. Field samples must be quantified using a calibration curve that spans the same concentration range used to collect the IDC data (Sect. 9.2).

10.3.2 Inject 200 µL of each standard into the IC-ESI/MS. Inject a RW blank after the highest CAL standard to check for carry-over (Sect. 9.2.1.1). Table 4 is provided to assist in tabulating data for standards and samples. Tabulate the area counts of *m/z* 101 and *m/z* 107, relative retention time ratios of *m/z* 99/107 and *m/z* 101/107, and the *m/z* 99/101 area count ratio. Evaluate if the *m/z* 99/101 area count ratio for all the standards are within the acceptance limits of 2.31 - 3.85 (Sect. 9.3.5) and verify that the relative retention time ratios for *m/z* 99/107 and *m/z* 101/107 are between 0.98 - 1.02 (Sect. 9.3.6).

NOTE: A different injection volume may be used as long as the data quality objectives and QC requirements of the method are met and that the same volume is used for the analysis of samples.

10.3.3 CALIBRATION ACCEPTANCE CRITERIA - Using the data obtained in Section 10.3.2, perform a regression (e.g., linear, weighted linear, quadratic) of the *m/z* 101/107 area count ratio vs. concentration of ClO_4^-. To evaluate if the chosen regression model yields accurate results across the range, reprocess (do not re-analyze) CAL standards as unknowns and determine the calculated concentrations. Determine the percent recoveries of the reprocessed CAL standards based on the known concentrations. Recoveries at ALL the tested concentrations must be within 80 - 120% for concentrations > the MRL. For

concentrations ≤ the MRL, the minimum acceptance criterion is 50 - 150% recovery. If the recoveries are not within the acceptable ranges, a different regression model such as a weighted linear, quadratic or weighted quadratic should be tested. An acceptable calibration has been obtained when recoveries of reprocessed standards are within the acceptance criteria stated above.

NOTE: For additional verification of the chosen regression model, or if experiencing problems in meeting QC criteria contained in this method, refer to Appendix A for instructions on how to statistically verify regression models for instrument calibration.

10.3.4 INITIAL CALIBRATION VERIFICATION - Analyze a QCS sample (Sect. 3.17) fortified near the midpoint of the calibration range. The QCS sample should be from a source different than the source of the calibration standards. If a second vendor is not available, then a different lot of the standard should be used. The QCS should be prepared and analyzed just like a CCC. The calculated amount of ClO_4^- must be 80-120% of the certified value. If the measured analyte concentration does not meet this criterion, check the entire analytical procedure to locate and correct the problem before analyzing any field samples. Calculate percent recovery (%R) using the following equation:

$$\%R = \frac{\text{measured concentration}}{\text{certified concentration}} \times 100$$

10.4 CONTINUING CALIBRATION CHECKS (CCCs) - At the beginning of the Analysis Batch, the Initial Calibration must be verified by analyzing a mid-level and MRL level CCC. Throughout an Analysis Batch the calibration is verified after every ten field samples by the analysis of a CCC that is rotated between low (≤ MRL), medium (mid-level calibration concentration) and high concentration (upper calibration concentration). CCCs are not counted as samples. Analyze CCCs under the same conditions used during the Initial Calibration.

10.4.1. MID-LEVEL CCC - The first CCC of an Analysis Batch must be at or near the mid-point of the calibration to verify the Initial Calibration. Acceptance criteria for the mid-level CCC is 80-120% recovery. **The IS area count acceptance criterion (Sect. 9.3.4) for subsequent samples must be relative to this first CCC.**

NOTE: If the IS response drifts below 50% of the average IS response of the CAL standards from the Initial Calibration, instrument maintenance or ESI/MS detector inlet cleaning may be required (Sect. 4.2.3).

10.4.2 MRL CONCENTRATION CCC- A CCC at a concentration that is ≤ the MRL concentration is performed, following the mid-level CCC, to verify instrument sensitivity prior to any analyses. The acceptance criteria is 50-150% recovery.

10.4.3 After every tenth field sample and at the end of an Analysis Batch, CCCs must alternate between low (≤ MRL), medium (mid-level calibration concentration) and high concentration (upper calibration concentration). Calculate the concentration of ClO_4^- in the CCCs. A CCC fortified at ≤ MRL must calculate to be 50-150% of the true value. CCCs fortified at all other levels must calculate to be 80-120%. If the criteria are not met, then all data from the last successful CCC to the failed CCC must be considered invalid, and remedial action (Sect. 10.4.4) should be taken. The remedial action may require re-calibration. Any field samples that have been analyzed since the last acceptable CCC, that are still within their holding times, should be reanalyzed after calibration has been restored.

10.4.4 REMEDIAL ACTION - Failure to meet CCC QC performance criteria may require remedial action. Major maintenance such as cleaning the ion source or mass analyzer, requires returning to the Initial Calibration (Sect. 10.3).

11. PROCEDURE

11.1 Important aspects of this analytical procedure include proper sample collection and storage (Sect. 8), ensuring that the instrument is properly calibrated (Sect.10) and that all required QC are met (Sect. 9.2). This section describes the procedures for sample preparation and analysis.

11.2 IC-ESI/MS START-UP - The IC should be allowed to operate until the conductivity of the eluate from the conductivity suppressor stabilizes (<1 µS for the data presented in this method), at which time it may be connected to the ESI/MS. It is recommended that the IC-ESI/MS operate for approximately 30 minutes prior to the analysis of samples.

11.2.1 For some IC-ESI/MS instrumentation it may be necessary to use a second six-port valve (Valve 2 in Figures 1 and 2) and auxiliary pump to improve system ruggedness and to maintain sensitivity for extended periods of time. To determine if the additional instrumentation is necessary, the repeated analysis of a mid-level concentration LFSSM (Sect. 3.10) for one or two days is recommended. If the IS area counts drift downward over time (to <50% of the average from the Initial Calibration), then it may be beneficial to install a second six-port valve and auxiliary pump.

11.3 SAMPLE PREPARATION

11.3.1 Collect and store field samples as described in Section 8.1. For refrigerated or field samples arriving at the laboratory cold, ensure the samples have equilibrated to room temperature prior to analysis by allowing the samples to sit on the bench for at least 30 minutes.

11.3.2 Process all LRBs, LFBs, LSSMBs and LFSSMs using the sample collection devices is Section 8.1.

11.3.3 Prepare the sample for analysis by pipetting 5 mL into an autosampler vial, or other suitable single use vial. Dilution of the sample may be required if the sample concentration is suspected to exceed the upper calibration standard. Add 50 µL of the 100 µg/L IS-FS (Sect. 7.2.1.2), cap the vial and invert several times to mix. If using a commercially available IS solution, calculate the volume necessary to achieve a 1.0 µg $Cl^{18}O_4^-$ /L final IS concentration in the sample.

NOTE: A 1% dilution error introduced by the addition of the IS is considered insignificant. It is permissible to use a different IS concentration; however, the analyst must be aware that ionization suppression of the native ClO_4^- may occur if the IS concentration is too high.

11.4 SAMPLE ANALYSIS

11.4.1 Establish optimal operating conditions for the IC-ESI/MS instrumentation to be used. Operating conditions may vary depending on instrumentation. The analyst is responsible for determining optimal conditions for their instrumentation. The configuration of Figure 1 and the operating conditions of Table 1 were used to generate the data presented in this method.

11.4.2 Establish a valid Initial Calibration following the procedures outlined in Section 10.3 or confirm that the calibration is still valid by analyzing the required CCCs as described in Section 10.4.

11.4.3 Inject aliquots of field samples and QC samples under the same instrumental conditions used for the Initial Calibration (a 200 µL sample size was used in collection of data for the method). A sample Analysis Batch is presented in Table 3.

NOTE: If not using an autosampler, use a syringe to withdraw the sample from the sample vial. Place the injection valve in the Load position and manually load the sample loop. The loop size must be the same loop size that was used to calibrate the instrument. Flush the loop with at least three loop volumes of sample.

11.4.4 At the conclusion of data acquisition, use the same data acquisition method that was used for the Initial Calibration to identify peaks in the chromatogram. Use the data acquisition method to determine the relative retention times and integrate the peak areas of the monitored ions (*m/z* 99, 101, and 107).

11.5 COMPOUND IDENTIFICATION - Identification/confirmation of ClO_4^- in a sample is made by detecting ClO_4^- at *m/z* 101 and *m/z* 99 at the retention time of the internal standard and by passing the QC criteria established for the *m/z* 99/101 area count ratio.

11.5.1 RELATIVE RETENTION TIME ACCEPTANCE CRITERIA - Since the $Cl^{18}O_4^-$ IS has the same retention time as naturally occurring ClO_4^-, the retention time ratio of *m/z* 99/107 and *m/z* 101/107 in samples must be within 0.98 - 1.02 ($\pm$2% of ideal ratio of 1) for confirmation of ClO_4^- in a sample.

11.5.2 AREA COUNT RATIO (*m/z* 99/101) ACCEPTANCE CRITERIA - All CAL standards, QC samples and field samples must meet the *m/z* 99/101 area count ratio requirement for confirmation of ClO_4^- (Sect. 9.3.5). The measured ratio must fall within $\pm$25% (2.31-3.85). If this area count ratio requirement is not met for a CCC or LFB, then all samples in the Analysis Batch are considered invalid and must be reanalyzed after reestablishing acceptable instrument performance. Field samples having *m/z* 99/101 area count ratios falling outside this range due to sulfate interference must be diluted and/or pretreated with barium form pretreatment cartridges to remove/reduce sulfate to a level that allows better integration of the ClO_4^- peak at *m/z* 99. Section 11.6 describes the required remedial action in the case that (1) a peak is detected at *m/z* 101 at the retention time of the IS at concentrations $\geq$ the MRL but no peak is detected at *m/z* 99 due to high sulfate concentration in the sample, or (2) peaks are detected at both the *m/z* 101 and *m/z* 99 ions but the ratio is not within control due to high sulfate concentration in the sample. In either case, the required remedial action described in Section 11.6 must be performed.

11.6 REQUIRED REMEDIAL ACTION - If ClO_4^- is detected at *m/z* 101 at concentrations $\geq$ the MRL, but the *m/z* 99/101 area count ratio fails due to background counts at *m/z* 99, remedial action is required (Sect. 11.6.1 and/or Sect 11.6.2). Sample dilution and/or pretreatment using the barium form pretreatment cartridge are acceptable means to reduce the background at *m/z* 99 due to high concentrations of sulfate. Generally, the background at *m/z* 99 is considered high if it is approximately 10-20 times higher than the background at *m/z* 99 measured in the first CCC of the Analysis Batch (Sect. 10.4.1).

11.6.1 SAMPLE DILUTION - If the concentration detected at *m/z* 101 is at least 2 times the MRL, a 2-fold dilution of a fresh aliquot of sample may be attempted to lower the background at *m/z* 99 due to sulfate in the sample. The *m/z* 99/101 area count ratio must be re-evaluated in the diluted sample for confirmation of ClO_4^-. If the background at *m/z* 99 still appears high in the diluted sample, sample pretreatment using the procedure described in Section 11.6.2 must be attempted.

NOTE: If a sample is diluted, the analyst must be careful not to dilute the analyte concentration to below the MRL. Add the IS *after* dilution.

11.6.2 SAMPLE PRETREATMENT - If a sample is pretreated using pretreatment cartridges, an LRB must also be processed in the same manner as the sample. If all of the cartridges described in Section 6.7 are used in series, the sample flow path **must** be arranged as follows: (1) the Ba^{2+} cartridge (used to remove sulfate), (2) the Ag cartridge (used to remove chloride), (3) a 0.2 µm filter to remove colloidal silver, and (4) the H^+ cartridge (used to remove carbonate).

NOTE: Some sample matrices may result in an IS area count QC criteria failure (Sect 9.3.4), peak shape distortion, high background conductivity, or high background(s) at *m/z* 99, 101 and/or 107. In these cases, it may be helpful to use all three forms of the pretreatment cartridges described in Section 6.7. Consult the manufacturer's instructions for preparation of the pretreatment cartridges prior to use with samples. Generally, the procedure requires rinsing each cartridge with a minimum volume of RW. It has been found that rinsing with approximately 2 times the recommended volume of water gives better results. Insufficiently rinsed cartridges often result in random peaks by conductivity detection. Add the IS to the sample prior to sample pretreatment using the cartridges.

11.7 EXCEEDING THE CALIBRATION RANGE - The analyst must not extrapolate beyond the established calibration range. If the calculated ClO_4^- concentration in a sample is greater than the highest CAL standard of the Initial Calibration, a fresh aliquot of the sample must be diluted, IS added, and the sample re-analyzed. Incorporate the dilution factor into the final concentration calculation.

12. DATA ANALYSIS AND CALCULATIONS

12.1 Tabulate data using Table 4 as a guide. Compute sample concentration on the *m/z* 101 quantitation ion using the calibration generated in Section 10.4.

12.2 If the measured concentration of a field sample exceeds the calibration range, a fresh aliquot of the sample must be diluted and re-analyzed and pass the confirmation criteria.

12.3 When using an autosampler, the analyst may be unaware that samples continued to be analyzed even after the failure of on-going QC. Therefore, if using an autosampler, check that all the on-going QC requirements of the method were successful in the interim of the analyst's absence. If a CCC failed at any point during an Analysis Batch, it will be necessary to re-analyze all samples after the last successful CCC.

12.4 Prior to reporting data, the laboratory is responsible for assuring that QC requirements have been met or that any appropriate qualifier is documented. Report ONLY those values that fall between the MRL and the highest calibration standard.

12.4.1 Calculations must utilize all available digits of precision, but final reported concentrations should be rounded to an appropriate number of significant figures (one digit of uncertainty), with not more than three significant figures.

13. METHOD PERFORMANCE

13.1 SUMMARY - Single laboratory precision in drinking waters, as measured by percent relative standard deviation (%RSD) of replicate analyses (n=7), was $\leq$ 10% at concentrations $\geq$ 0.2 µg/L ClO_4^-. Accuracy, as measured by percent recoveries of fortified drinking water samples and external Quality Control samples, was 90 - 110% for concentrations $\geq$ 0.1 µg/L ClO_4^-.

Single laboratory precision in fortified synthetic waters containing up to 1,000 mg/L of each of the common anions (LFSSM), as measured by %RSD of replicate analyses (n=7), was $\leq$20% at concentrations $\geq$ 0.1 µg/L ClO_4^-. Accuracy, as measured by percent recovery of fortified synthetic high ionic waters containing up to 1,000 mg/L of each of the common anions (LFSSM), was 80 - 120% for concentrations $\geq$ 0.1 µg/L ClO_4^-.

13.2 Figure 3 shows chromatograms of a 0.1 µg/L calibration standard with retention times for the ions monitored in this method (*m/z* 99, 101 and 107). Figure 4 shows chromatograms of a 1.0 µg/L ClO_4^- LFSSM solution containing 1,000 mg/L of chloride, sulfate and carbonate. Figure 4 also illustrates the effect of a high background at *m/z* 99 due to HSO_4^-.

13.3 Table 5 contains single laboratory DL and LCMRL data in RW.

13.4 Table 6 contains precision (%RSD) and recovery (%R) data for ClO_4^- in various drinking water and synthetic water samples at low and high fortification concentrations.

14. POLLUTION PREVENTION

14.1 For information about pollution prevention that may be applicable to laboratories and research institutions, consult "Less is Better: Laboratory Chemical Management for Waste Reduction," available from the American Chemical Society's Department of Government Regulations and Science Policy, 1155 16th Street N.W., Washington D.C. 20036, or on-line at http://www.ups.edu/community/storeroom/Chemical_Wastes/wastearticles.htm, last verified in March 2005.

15. WASTE MANAGEMENT

15.1 The analytical procedures described in this method generate relatively small amounts of waste since only small amounts of reagents are used. The matrices of concern are finished drinking water. However, the Agency requires that laboratory waste management practices be conducted consistent with all applicable rules and regulations, and that laboratories protect the air, water, and land by minimizing and controlling all releases from fume hoods and bench operations. Also, compliance is required with any

sewage discharge permits and regulations, particularly the hazardous waste identification rules and land disposal restrictions. For further information on waste management, see the publications of the American Chemical Society's Committee on Chemical Safety at http://membership.acs.org/c/ccs/publications.htm, last verified in March 2005. Or see "Laboratory Waste Minimization and Pollution Prevention," Copyright © 1996 Battelle Seattle Research Center, which can be found on-line at http://www.p2pays.org/ref/01/text/00779/index2.htm, last verified in March 2005.

16. REFERENCES

1. Statistical Protocol for the Determination of the Single-Laboratory Lowest Concentration Minimum Reporting Level (LCMRL) and Validation of the Minimum Reporting Level (MRL), available at www.epa.gov/OGWDW/methods/sourcalt.html, last verified in March 2005.

2. Glaser, J.A., D.L. Foerst, G.D. McKee, S.A. Quave, and W.L. Budde, "Trace Analyses for Wastewaters," *Environ. Sci. Technol*. 1981, 15, 1426-1435.

3. Lange's Handbook of Chemistry (15th Edition); Dean, J.A., Ed; McGraw-Hill: New York, NY, 1999.

4. "Carcinogens-Working with Carcinogens," Publication No. 77-206, Department of Health, Education, and Welfare, Public Health Service, Center for Disease Control, National Institute of Occupational Safety and Health, Atlanta, Georgia, August 1977.

5. "Safety In Academic Chemistry Laboratories," 3rd Edition, American Chemical Society Publication, Committee on Chemical Safety, Washington, D.C., 1979.

6. "OSHA Safety and Health Standards, General Industry," (29CFR1910). Occupational Safety and Health Administration, OSHA 2206, (Revised, January 1976).

7. ASTM Annual Book of Standards, Part II, Volume 11.01, D3370-82, "Standard Practice for Sampling Water," American Society for Testing and Materials, Philadelphia, PA, 1986.

8. Xu, J., Y. Song, B. Min, L. Steinberg, and B.E. Logan, "Microbial degradation of perchlorate: principles and applications," *Environ. Engin. Sci,* 2003*,* 20(5), 405-422.

ACKNOWLEDGMENTS

The authors would like to gratefully acknowledge Dr. Douglas W. Later, Dr. William C. Schnute and Robert J. Joyce of Dionex Corporation for their valuable contributions throughout the development of this method and in coordinating the collection of second laboratory demonstration data. The authors also acknowledge Jay Gandhi of Metrohm-Peak, Inc., for providing second laboratory demonstration data for the method.

17. TABLES, DIAGRAMS, FLOWCHARTS AND VALIDATION DATA

TABLE 1. DIONEX IC-MS OPERATING CONDITIONS*

Ion Chromatograph	Dionex Corporation, Sunnyvale, CA
Mobile Phase	75 mM KOH, or 65 mM KOH [1]
Guard and Separator Columns	Dionex AG16 + AS16, 250 mm X 2 mm
Flow Rate	0.3 mL/min
Conductivity Suppressor and Current	ASRS-MS, 75 mA, or 70 mA [1]
Column Temperature	30 ^{O}C
Auxiliary Pump Flow Rate[2]	0.3 mL/min RW, or 50/50 v/v acetonitrile/water [1]
Injection Volume	200 µL
Mass Spectrometer	MSQ with Enhanced Low Mass Option (ELMO) ThermoFinnigan, San Jose, CA
Ion Energy (V)	0.3
Low Mass Resolution	12.7
High Mass Resolution	12.5
Capillary Voltage	-3 kV
Sampling Cone Voltage	-70 V
Probe Temperature	400 ºC, or 500 ºC [1]
Nitrogen pressure	80 psi
Selected Ion Monitoring	*m/z* 99, 101, 107
Mass Scan Range	0.3 amu
Dwell Time per mass	0.75 sec, or 0.3 sec [1]
Smoothing/Points/Range	Boxcar/5/6

[1] Condition used in IC-MS Configuration 2.
[2]Auxiliary pump is used to deliver RW or 50/50 v/v acetonitrile/water to the conductivity suppressor and the mass spectrometer until 1.5 minutes prior to the elution of ClO_4^- depending on which configuration is used (Figures 1 or 2). For the data presented in this method, RW was used in the auxiliary pump.

*Instrumentation, when specified, does not constitute endorsement. Brand names are included for illustration only.

TABLE 2. METROHM-PEAK IC-MS OPERATING CONDITIONS*

Ion Chromatograph	Metrohm-Peak, Houston, TX
Mobile Phase	30 mM NaOH/30% Methanol
Guard and Separator Columns	Metrohm ASUPP4/5 + ASUPP5-100, 100 mm X 4 mm
Flow Rate	0.7 mL/min
Suppressor Regenerant	60 mM nitric acid/10% Methanol, Rinse 10% Methanol
Column Temperature	30 ^{O}C
Injection Volume	100 µL
Mass Spectrometer	1100 Series MSD Quad SL, Agilent Technologies, Wilmington, DE
Low Mass Resolution	0.65
Capillary Voltage	-2 kV
Nitrogen Pressure	80 psi
Fragmentor Voltage	150 V
Drying Gas Temperature	320 ^{o}C
Drying Gas Flow Rate	9 - 10 L/min
Selected Ion Monitoring	*m/z* 99, 101, 107
Mass Scan Range	0.1 amu
Dwell Time Per Mass	0.25 sec

*Instrumentation, when specified, does not constitute endorsement. Brand names are included for illustration only.

TABLE 3. SAMPLE ANALYSIS BATCH

Injection #	Sample Description	Acceptance Criteria	Remedial Action
1	Mid-Level CCC	80 - 120 % recovery using Initial Calibration	Instrument maintenance and recalibration.
2	MRL CCC	50 - 150% recovery	Instrument maintenance to recover sensitivity and recalibration.
3	LRB	<1/3 MRL concentration	Find and correct source of contamination.
4	LFB ≤ MRL concentration >MRL to highest CAL std	 50 - 150% recovery 80 - 120% recovery	Identify and correct source of problem.
5 . . 14	Field Samples 1 - 10	Pass RT, *m/z* 99/101 area count ratio, and IS area count QC criteria at concentrations ≥MRL concentration.	If problem is due to sulfate, clean up sample using Ba form cartridge, otherwise report.
15	CCC (rotating concentrations)	80 - 120% recovery using Initial Calibration for concentrations > MRL 50-150% recovery for concentrations ≤ MRL	Instrument maintenance and recalibration.
16	LFSM of a field sample previously analyzed	At fortification concentrations > MRL concentration, 80-120% recovery. At fortification concentrations ≤ MRL, 50-150% of true value.	If problem is due to sulfate, clean up sample using Ba form cartridge, otherwise report.
17	Laboratory Duplicate or a LFSMD of field sample previously analyzed. Choose LFSMD if samples are low in perchlorate.	RPD ≤20% for concentrations > 2 X MRL RPD ≤50% for samples ≤ 2 X MRL	If RPD out of the designated range, but the laboratory performance is acceptable in LFB, the recovery problem is judged to be matrix related. Label sample "suspect matrix".
18 . . 27	Field Samples 11 - 20	Pass RT, *m/z* 99/101 area count ratio, and IS area count QC criteria.	If problem is due to sulfate, clean up sample using Ba form cartridge, otherwise report.
28	Final CCC (rotating concentrations)	80 - 120 % recovery using Initial Calibration for concentration > MRL	Instrument maintenance and recalibration.

TABLE 4. EXAMPLE TEMPLATE FOR TABULATION OF SAMPLE DATA FOR QC REQUIREMENTS

Sample ID	Ion (*m/z*)	Area Counts	Retention Time (min)	Relative Retention Time Ratio (*m/z* 99/107, *m/z* 101/107)*	Area Count Ratio (*m/z* 99/101)**
	99				
	101				
	107			Are area counts of IS ±30% of first CCC?	
	99				
	101				
	107			Are area counts of IS ±30% of first CCC?	

* - Acceptance Criteria (0.98 - 1.02)

** - Acceptance Criteria (2.31 - 3.85)

TABLE 5. DETECTION LIMIT AND LCMRL FOR PERCHLORATE IN REAGENT WATER

	Concentration (µg/L) - *m/z* 101
Detection Limit*	0.02
LCMRL	0.10

*Fortification concentration - 0.05 µg/L.
Seven replicates over three days.

TABLE 6. PRECISION AND RECOVERY DATA FOR PERCHLORATE IN VARIOUS MATRICES (N=7)

Matrix	Background Conc. (µg/L)	Fortification Conc. (µg/L)	*m/z* 99/101 Area Ratio	Avg. % Recovery	%RSD
Reagent Water	ND[1]	0.05	2.77	105	14
		0.50	3.05	102	3.6
LSSM	ND	0.20	2.64	90	11
		1.0	2.70	90	3.0
Surface Source Tap Water	0.27	1.0	2.98	99	1.6
High TOC Surface Source Tap Water[2]	ND	0.20	2.93	104	8.6
		1.0	3.04	95	1.5
Ground Water	<LCMRL[3]	0.20	2.83	99	7.4
		1.0	2.99	93	2.4

1 - Not detected.
2 - 15 mg/L total organic carbon.
3 - LCMRL = 0.10 µg/L

TABLE 7. INITIAL DEMONSTRATION OF CAPABILITY (IDC) REQUIREMENTS

Method Reference	Requirement	Specification and Frequency	Acceptance Criteria
Section 9.2.1	Demonstration of Low System Background	Analyze an LRB and LSSMB prior to any other IDC steps and when modifications are made.	<1/3 MRL (Sect. 9.3.1)
Section 9.2.1.1	Concentration Dependent Carry-Over	During IDC and when modifications are made. Analyze a RW blank after the high CAL during Initial Calibration.	Demonstrate that carry-over from one injection to the next is <1/3 the MRL.
Section 9.2.2	Demonstration of Precision in LFBs and LFSSMs	Analyze 7 replicates fortified near mid-range of calibration.	≤20% RSD
Section 9.2.3	Demonstration of Accuracy in LFBs and LFSSMs	Calculate the average recovery for replicates in Section 9.2.2.	80 - 120% recovery at the mid-level concentration
Section 9.2.4	Minimum Reporting Level (MRL) Confirmation	Analyze 7 replicate LFBs at the target MRL. Use the equation provided to verify the MRL. Repeat after major instrument or operational changes.	MRL acceptance based on project DQOs or regulatory requirements. Upper PIR ≤ 150% Lower PIR ≥ 50%

TABLE 8. ON-GOING QUALITY CONTROL REQUIREMENTS (SUMMARY)

Method Reference	Requirement	Specification and Frequency	Acceptance Criteria
Section 8	Sample Collection, Preservation, and Holding Time	28 days, samples must be sterile filtered through a 0.2 µm filter with the filtrate collected in a sterile bottle.	Ship at ≤ 10 °C to be received within 48 hours. Once received at the lab, samples should be analyzed as soon as possible. Sterile filtered samples must be stored with head space. Leave 1/3 of bottle empty. Store at 6 °C or less.
Section 10.3	Initial Calibration	Use internal standardization calibration and a minimum of 5 calibration standards. Use peak area for calibration and quantitation.	80 - 120% recovery of all reprocessed standards at > the MRL. 50 - 150% recovery of reprocessed standards ≤ the MRL.
Section 9.3.1	Laboratory Reagent Blank (LRB)	Analyze one LFB per Analysis Batch (every 20 field samples).	Demonstrate that the target analyte is <1/3 the MRL (at both *m/z* 99 and *m/z* 101 at the RT for ClO_4^-), and that possible interferences do not prevent the identification and quantification of ClO_4^-.
Section 10.4	Continuing Calibration Check (CCC)	With each Analysis Batch (20 field samples), verify Initial Calibration by analyzing a mid-level and an MRL CCC. Analyze a CCC after every 10 field samples and after the last sample in the Analysis Batch. Alternate between low (≤MRL), medium and high CAL standards.	Mid-level CCC must be 80 - 120% recovered. MRL CCC must be 50 - 150% recovered. The peak area of the IS must be within ±30% of the peak area of the first CCC of the Analysis Batch (Sect. 10.4.1).
Section 9.3.3	Laboratory Fortified Blank (LFB)	With each Analysis Batch (20 field samples).	50 - 150% rec. at conc.≤ MRL 80 - 120% rec. at conc. > MRL
Section 9.3.4	Internal Standard Area Counts	In all standards, field samples, LFBs, CCCs, etc., analyzed during each Analysis Batch.	Deviation of area counts not to exceed ±30% of area counts of first CCC of the Analysis Batch.

TABLE 8 (Continued). ON-GOING QUALITY CONTROL REQUIREMENTS (SUMMARY)

Method Reference	Requirement	Specification and Frequency	Acceptance Criteria
Section 9.3.5	Area Count Ratio (*m/z* 99/101) Acceptance Criteria	In all standards, field samples, LFBs, CCCs, etc., analyzed during each Analysis Batch.	The calculated *m/z* 99/101 area count ratio must be within ± 25% (2.31 - 3.85).
Section 9.3.6	Relative Retention Time Acceptance Criteria	In all standards, field samples, CCCs, LFBs, LFSMs, etc.	Relative retention times of *m/z* 99/107 and *m/z* 101/107 must be within 0.98 - 1.02.
Section 9.3.7	Laboratory Fortified Sample Matrix (LFSM)	Analyze one LFSM per Analysis Batch (every 20 field samples) fortified with perchlorate at a concentration that is greater than or equal to the native concentration.	Recoveries not within 80 - 120% of the fortified amount at > MRL may indicate a matrix effect. Conc. ≤ MRL may be recovered 50 - 150%.
Section 9.3.8	Laboratory Duplicate (LD) or Laboratory Fortified Sample Matrix Duplicate (LFSMD)	Analyze at least one LFSMD or LD with each Analysis Batch of up to 20 field samples.	≤50% RPD at conc. ≤2 X MRL ≤20% RPD at conc. > 2 X MRL
Section 10.3.4	Initial Calibration Verification	Each time the Initial Calibration is repeated or new standards are prepared, analyze a QCS.	80 - 120% recovery of the certified concentration at the mid-range of the calibration.

FIGURE 1. IC-ESI/MS Configuration Used to Generate Data in Method

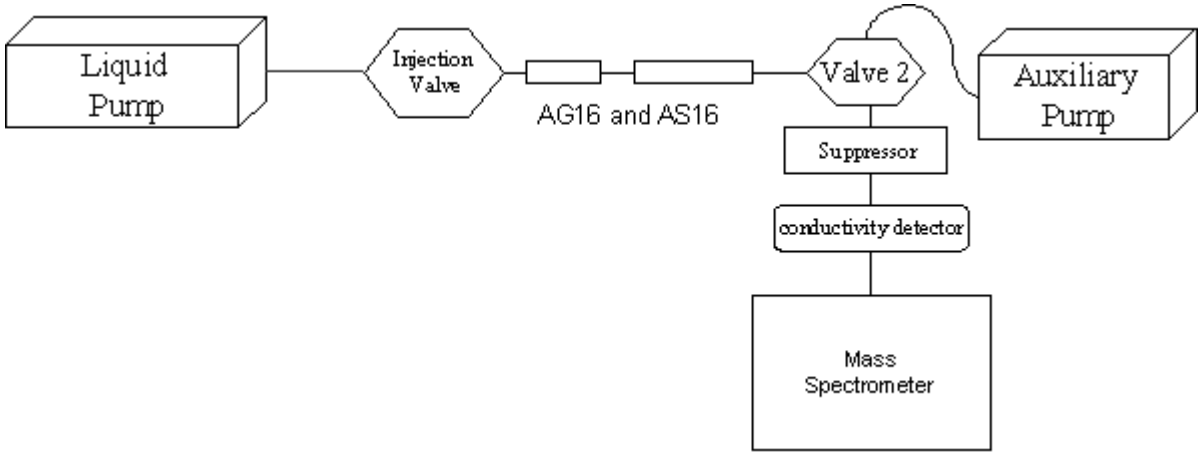

FIGURE 2. Alternative IC-ESI/MS Configuration

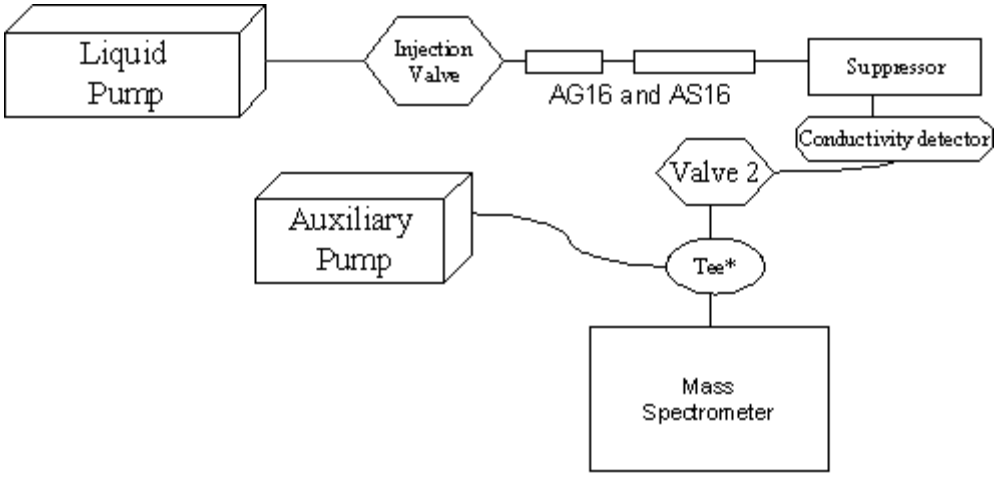

* static mixing tee

FIGURE 3. MASS CHROMATOGRAM OF A STANDARD CONTAINING 0.1 µg/L ClO_4^- AND 1.0 µg/L INTERNAL STANDARD

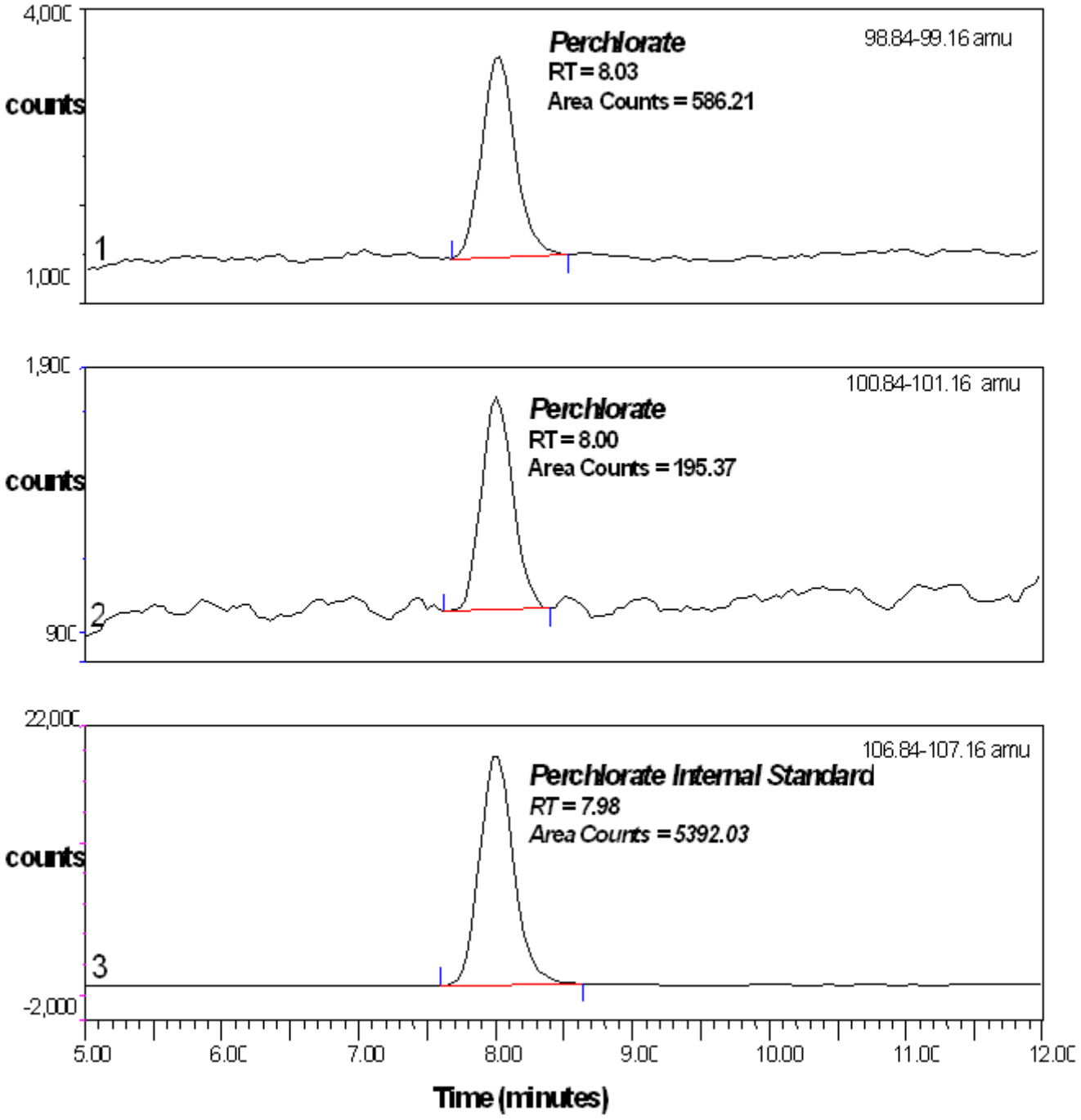

FIGURE 4. MASS CHROMATOGRAM OF AN LFSSM CONTAINING 1.0 µg/L ClO_4^- AND 1.0 µg/L INTERNAL STANDARD

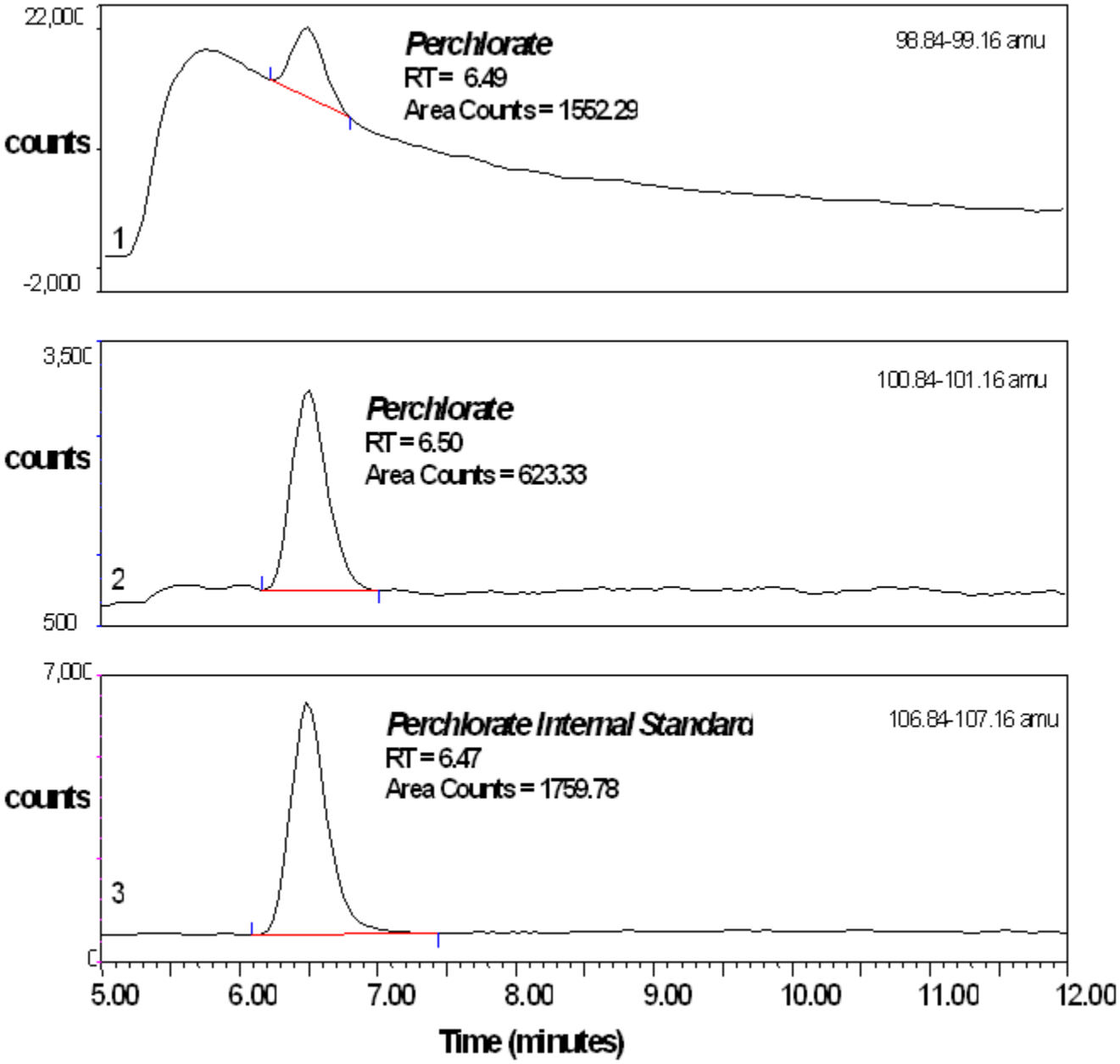

APPENDIX A (Optional)

Statistical Validation of the Regression Model Used For Instrument Calibration

Introduction

Selection of an appropriate regression model for instrument calibration is critical for obtaining accurate, non-biased results and for the determination of an LCMRL and MRL. The following guidance is provided for labs that desire additional validation of their instrument calibration model and for labs that may be experiencing problems meeting the QC criteria contained in Section 9 of the method.

Background

The Calibration Range (CR) is defined as the concentration range over which the instrument has been calibrated and results may be reported. During the Initial Demonstration of Capability (Sect. 9.2), the regression model used to describe the CR must pass certain minimum criteria for accuracy as determined by the percent recovery of standards that are reprocessed (not re-analyzed) as samples. In practice, a lab may find that low concentration standards are consistently biased low (or high). It may be that the analyst has attempted to calibrate over too large of a concentration range for the chosen model. The analyst may change the range of interest or select a different model but be unsure if the new range and/or model is appropriate. The F-test for lack of fit, described below, is a statistical metric for determining if a selected regression model (e.g., linear, quadratic) gives a non-biased estimate of the expected response, Pred Y (area count ratio, *m/z* 101/107), as a function of standard concentration, x.

General Recommendations

- The instrument should be operationally stable. This may require a period of approximately 30 minutes of operation with liquid flow through the IC-ESI/MS system.

- If the desired CR is two orders of magnitude or greater, a weighted regression model will likely be required. Most newer instrumentation automatically allows for this type of calibration. For the instrumentation used in this method, it was found that a non-weighted linear regression model yielded 90-110% recoveries of all standards, for concentrations 0.1-1.0 µg/L ClO_4^-. If, however, the upper range was extended to 5.0 or 10.0 µg/L, a weighted linear regression was required (weight factor = 1/x) to achieve the same results. Using a non-weighted linear regression across the range 0.1-5.0 or 10.0 µg/L resulted in consistently high recoveries (115-131%) for the 0.1 µg/L CAL standards. Choosing a short range over which the variance is constant (e.g. 0.1-1.0 µg/L ClO_4^-), or using a weighted regression model, are both acceptable means to obtain a regression that yields accurate, non-biased results across the range.

- The F-test for lack of fit assumes constant variance across the concentration range. Statistical software is highly recommended to test for constant variance and to perform the F-test for lack of fit; however, if statistical software is not available, the mathematical procedures described below should result in selection of an appropriate regression model.

Procedure

1. Prepare and inject, **in duplicate**, five standards that span the range of interest. Concentration is the independent variable, x, and the dependent variable, y, is the area count ratio *m/z* 101/107. Evaluate each standard to make sure the IS area counts are within control and that the m/z 99/101 area count ratio is in control. Tabulate concentration (µg/L), x, and response (area count ratio *m/z* 101/107), y.

   NOTE: To perform the F-test for lack of fit, there must be replicates on some or all of the levels of concentration, x.

2. Using the data obtained in Step 1, perform a non-weighted linear regression of the area count ratio (area count ratio *m/z* 101/107) vs. concentration (µg/L) of ClO_4^-.

3. Decide what will be deemed acceptable recoveries for the data quality objectives of the work. For the example presented below, it was decided that 90 - 110% recoveries across the range would be the criteria for accepting the model (see Table A1).

4. To evaluate if the chosen regression model yields accurate results (i.e., constant variance across the range), reprocess (do not re-analyze) standards as unknowns and determine the calculated concentrations. Determine the percent recoveries of the reprocessed standards based on the known concentrations (see example in Table A1). Recoveries should meet the recovery criteria and be consistent across the range, i.e., recoveries at ALL the tested concentrations must be within the recovery range (in the example presented here that range is 90 - 110%).

5. If the recoveries are not consistent across the range, a weighted linear regression model should be tested. Reprocess the data and re-evaluate the recalculated recoveries. If the results are still unacceptable, delete the highest standard from the regression model and reprocess the data. If unacceptable results are still encountered when the range has been reduced to one order of magnitude, there may be very poor precision between duplicate analyses. This may signal that instrument maintenance is required.

6. Since the F-test for lack of fit assumes normally distributed data with equal variances for the Y distribution (i.e., across the range of concentrations), a weighted regression model should be tried before proceeding to the F-test for lack of fit. Weighting will generally give better recoveries across a wide calibration range. When an acceptable range and model have been chosen that yields recoveries of reprocessed standards within the set criterion for recoveries of reprocessed standards, proceed to Step 7, the F-test for lack of fit.

7. F-TEST FOR LACK OF FIT - The use of statistical software to perform the F-test for lack of fit is highly recommended. If this option is not available, however, use a spreadsheet software program and the following directions to perform the test. Prepare a table exactly like Table A2 and enter the data required in each column.

The test statistic involves calculating F* for the chosen model and comparing it to a critical F value from a standard table of F values.[1] The test statistic is as follows:

$$F^* = \frac{SSLF / DF_{LOF}}{SSPE / DF_{PE}}$$

where,

F*	=	calculated F for regression model
SSLF	=	lack of fit sum of squares. See Table A2 for calculation.
SSPE	=	pure error sum of squares. See Table A2 for calculation.
DF_{LOF}	=	degrees of freedom for SSLF. Equals c - 2 for 1st order polynomial. Equals c - 3 for second order polynomial (quadratic).
DF_{PE}	=	degrees of freedom for SSPE. Equals n - c.

c = number of concentration levels.
n = total number of observations.

Table A2 shows the mathematical calculation of SSLF and SSPE from the data obtained from the chosen regression model (a weighted 1st order linear regression model). The table was completed by entering the required data into a software spreadsheet program. In the example provided in Table A2, n = 10 and c = 5. Critical F(1-alpha, c-2, n-c) = F(0.95, 3, 5) = 9.01. The Decision rule was:

If $F^* \leq 9.01$, then conclude that the regression model is appropriate.
If $F^* > 9.01$, then conclude that the regression model is not appropriate.

In this example, the calculated F* using a weighted linear regression model was 0.8874 which is less than the critical F value of 9.01. It was concluded that the selected model was appropriate. If the calculated F* had been greater than the critical F value, then a different model (quadratic or weighted quadratic) would have been evaluated and consistent recoveries and lack of fit would have been tested again with proper modification of the degrees of freedom for SSLF. Return to Step 4.

Reference

1. Neter, J., W. Wasserman and M. Kutner, Applied Linear Regression Models, 1989, Irwin, Inc, Boston, MA.

APPENDIX A

TABLE A1. SAMPLE DATA COMPILATION AND DETERMINATION OF ACCURACY OF CALIBRATION MODEL

	A	B	C
1	X = Conc. [1] µg/L	Pred Xij [2] µg/L	%Recovery
2	0.1	0.1094	109
3	0.1	0.0926	92.6
4	0.5	0.4828	96.6
5	0.5	0.4609	92.2
6	1	1.0196	102
7	1	0.9882	98.8
8	5	5.0781	102
9	5	5.0889	102
10	10	10.155	102
12	10	10.349	104

[1] X = concentration of CAL standard. Levels of X = 1 - j, replicates = 1 - i
[2] Predicted Xij = concentration calculated from regression model for a given Yij.

NOTE: The weighted linear regression equation was **y = 0.0014148 + 0.3612397 X**.

APPENDIX A

TABLE A2. SPREADSHEET TABULATION OF DATA TO DETERMINE F-TEST FOR LACK OF FIT

	A	B	C	D	E	F	G
1	[1]**X**	[2]**Y**		[4]**Pred Y**			
2	**1/Xij**	**Yij=(m/z 101/107)*(1/X)**	[3]**Mean Yj**	[4]**(Pred Yij)*(1/X)**	**(MeanYj - PredYij)^2**	**(Yij-MEAN Yj)^2**	
3	10	0.409412140738561	0.3790897717	0.3753877	1.37053349457528E-005	0.000919446063506114	
4	10	0.348767402681377	0.3790897717	0.3753877	1.37053349457528E-005	0.000919446063506114	
5	2	0.35171017276265	0.3437878062	0.3640693	0.000411338989721146	6.27638915474167E-005	
6	2	0.335865439688544	0.3437878062	0.3640693	0.000411338989721146	6.27638915474176E-005	
7	1	0.369735548824696	0.3640767720	0.3626545	2.02285782420544E-006	3.20217544267144E-005	
8	1	0.358417995303424	0.3640767720	0.3626545	2.02285782420544E-006	3.20217544267138E-005	
9	0.2	0.367171010012092	0.3675596088	0.36152266	3.64447517258711E-005	1.51009076672299E-007	
10	0.2	0.367948207738986	0.3675596088	0.36152266	3.64447517258711E-005	1.51009076672299E-007	
11	0.1	0.366984493885163	0.3705014438	0.36138118	8.31792126127104E-005	1.23689370239679E-005	
12	0.1	0.374018393805966	0.3705014438	0.36138118	8.31792126127104E-005	1.23689370239683E-005	
13				[5]SSLF =	0.00109338229365937	0.00205350331116177	=[6]SSPE
14				SSLF/c-2 =	0.000364460764553124	0.000410700662232354	=SSPE/n-c
15				[7]F* = (SSLF/3)/(SSPE/5)=	0.887		

[1] X = concentration of CAL standard with weighting factor applied. Levels of X = 1 - j, replicates = 1 - i. **NOTE:** If not using a weighted regression, then X = concentration.

[2] Y = (Yij *m/z* 101/107area count ratio) times (the weighting factor, 1/X). **NOTE:** If not using a weighted regression, then Y = *m/z* 101/107 area count ratio.

[3] Mean Yj = mean of Y for a given replicate level, i.

[4] Pred Y = predicted Yij using the chosen regression model for a given X with weighting factor applied. **NOTE:** If not using a weighted regression, then Pred Y would not have the weighting factor applied. The weighted linear regression equation was **y = 0.0014148 + 0.3612397 X.**

[5] SSLF = lack of fit sum of squares. Obtained by summing cells E3..E12. Degrees of freedom = c - 2 for 1st order polynomial. For this example, degrees of freedom for SSLF = 3. **NOTE:** Degrees of freedom for a quadratic fit would be c - 3.

[6] SSPE = sum of squares pure error. Obtained by summing cells F3..F12. For this example, degrees of freedom for SSPE = 5.

[7] F* = calculated F for the given regression model.