APPENDIX D

PROPOSED RIGHT-OF-WAY CONFIGURATIONS ASSOCIATED WITH THE BRADWOOD LANDING PROJECT

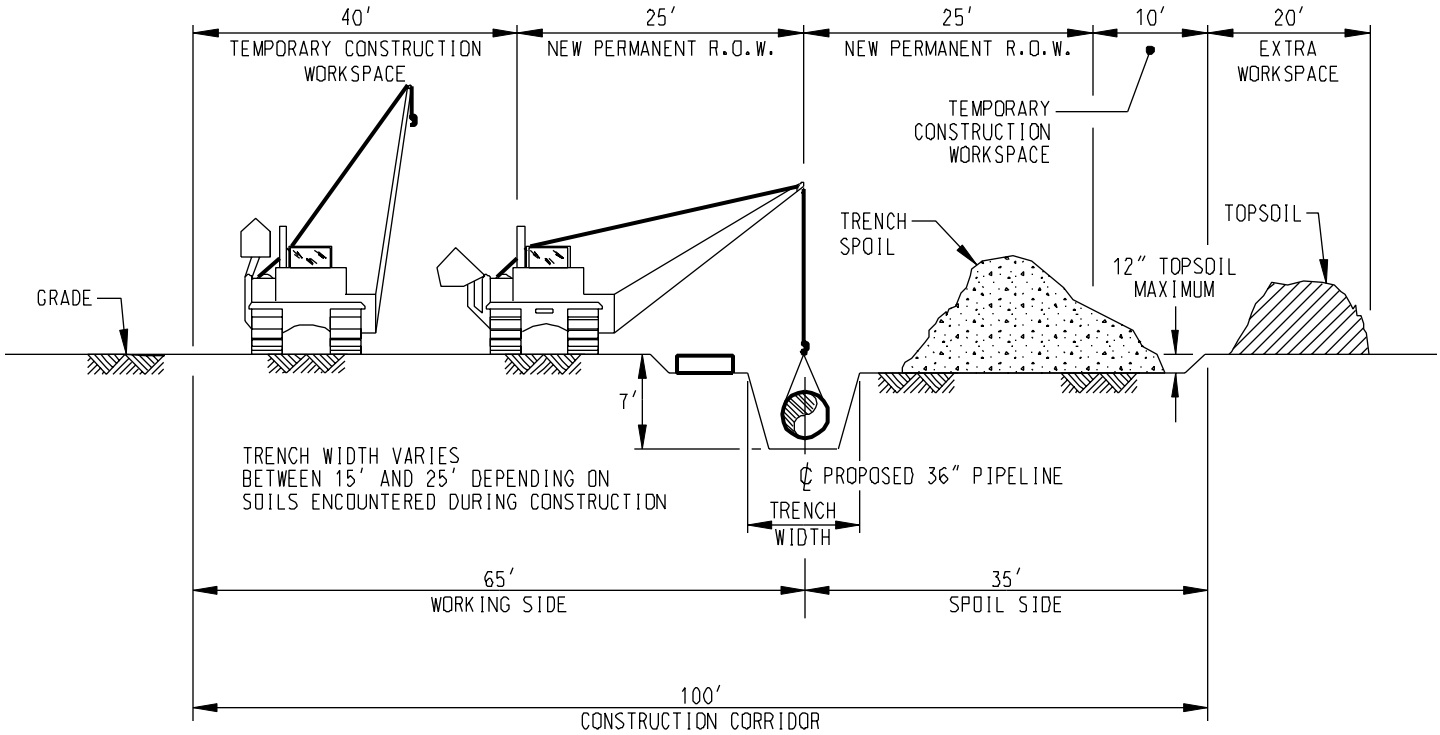

PROFILE

PUBLIC

NO.	REVISION	DATE	DRAWN	CHK'D.	APP'D
A	ISSUED FOR INFORMATION ONLY	09/19/2005	CMR	JW	DR

DRAWN: PES	DATE: 09/19/2005
CHECKED:	DATE:
ENGINEER:	DATE:
APPROVED:	DATE:
REVIEW:	DATE:
SCALE: N.T.S.	SHEET 1 OF 1
JOB NO.: A-5015	
CLIENT/ CLIENT JOB NO.	
DOCUMENT NO.	

TYPICAL UPLAND CROSS-SECTION WITH DITCH PLUS SPOIL SIDE TOPSOIL SEGREGATION

DRAWING NO A5015-00-051307-9201 REV A

User: wendle.smith
R:\A5015\PRJ\Mapping\Ferc_Details\A5015-00-051307-9201.dgn
4:01:02 PM
12/08/2005

User: wendle.smith
R:\A5015\PRJ\Mapping\Ferc_Details\A5015-00-051307-9116.dgn
12/08/2005 3:58:55 PM

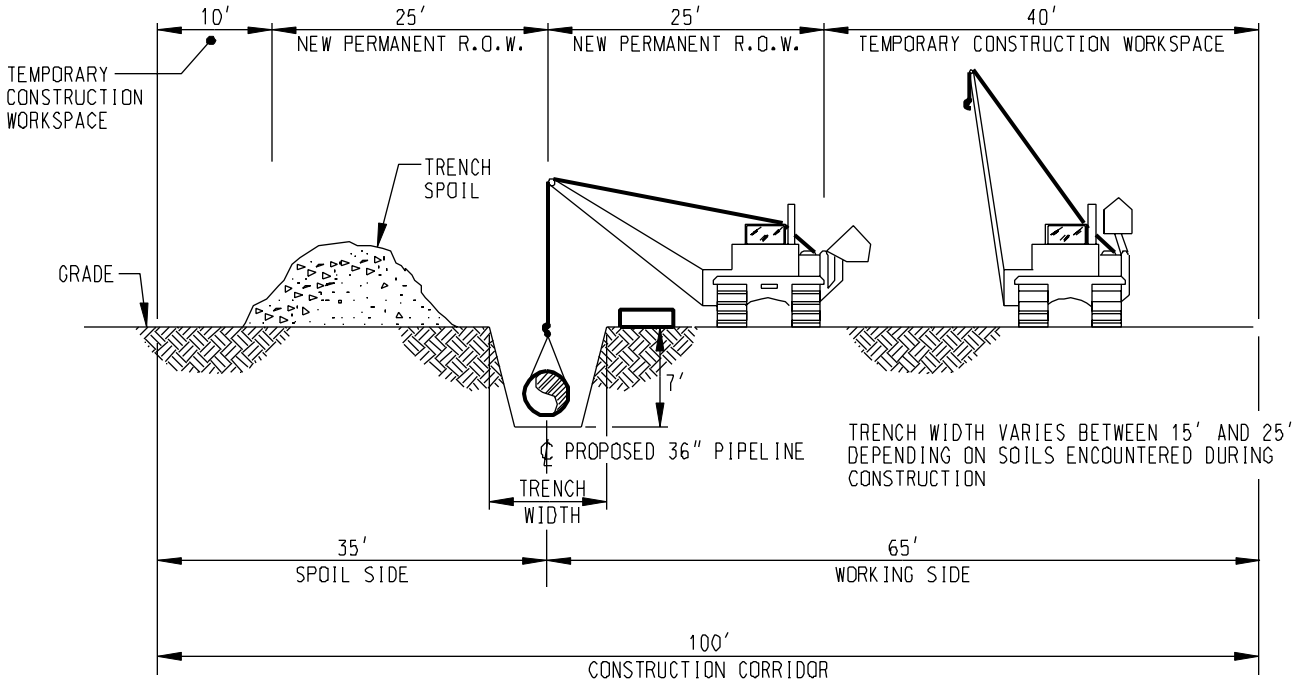

PUBLIC

NO	REVISION	DATE	DRAWN	CHK'D.	APP'D.
A	ISSUED FOR INFORMATION ONLY	09/19/2005	CMR	JW	DR

DRAWN: PEG	DATE: 09/19/2005
CHECKED:	DATE:
ENGINEER:	DATE:
APPROVED:	DATE:
REVIEW:	DATE:
SCALE: N.T.S	SHEET 1 OF 1
JOB NO.: A-5015	
CLIENT/ CLIENT JOB NO.	
DOCUMENT NO.	

TYPICAL UPLAND CROSS SECTION WITHOUT TOPSOIL SEGREGATION CONSTRUCTION METHOD 29

DRAWING NO. A5015-00-051307-9116 REV A

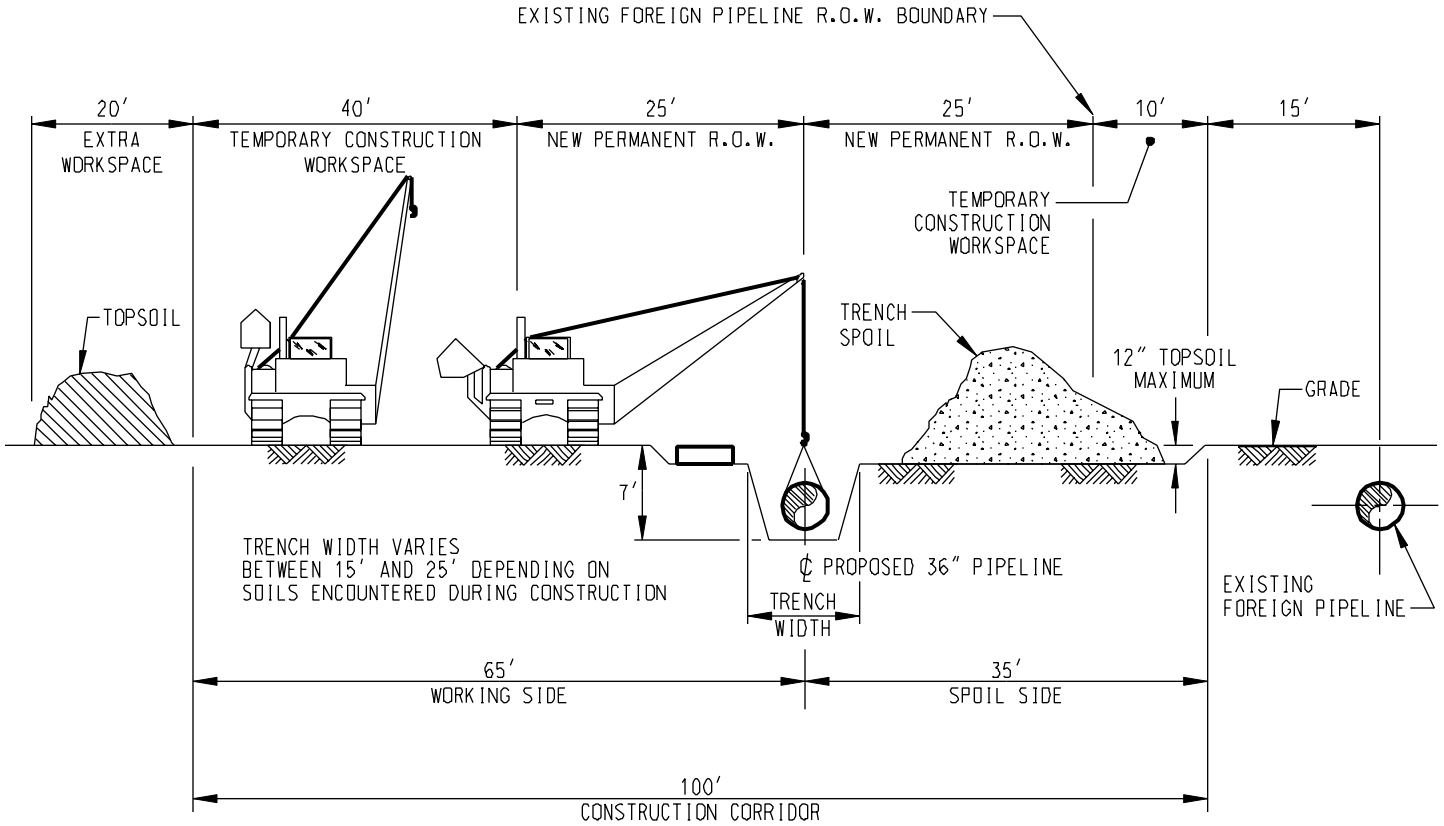

PROFILE

PUBLIC

NO.	REVISION	DATE	DRAWN	CHK'D.	APP'D
A	ISSUED FOR INFORMATION ONLY	09/19/2005	CMR	JW	FMS

DRAWN: PES	DATE: 09/19/2005
CHECKED:	DATE:
ENGINEER:	DATE:
APPROVED:	DATE:
REVIEW:	DATE:
SCALE: N.T.S.	SHEET 1 OF 1
JOB NO.: A-5015	
CLIENT/ CLIENT JOB NO.	
DOCUMENT NO.	

TYPICAL UPLAND CROSS-SECTION WITH PIPELINE ADJACENT TO FOREIGN PIPELINE WITH DITCH PLUS SPOIL SIDE TOPSOIL SEGREGATION

DRAWING NO A5015-00-051307-9200 REV A

User: wendle.smith
R:\A5015\PRJ\Mapping\Ferc_Details\A5015-00-051307-9200.dgn
12:38:03 PM
12/13/2005

User: wendle.smith
R:\A5015\PRJ\Mapping\Ferc_Details\A5015-00-051307-9118.dgn
12:37:00 PM
12/13/2005

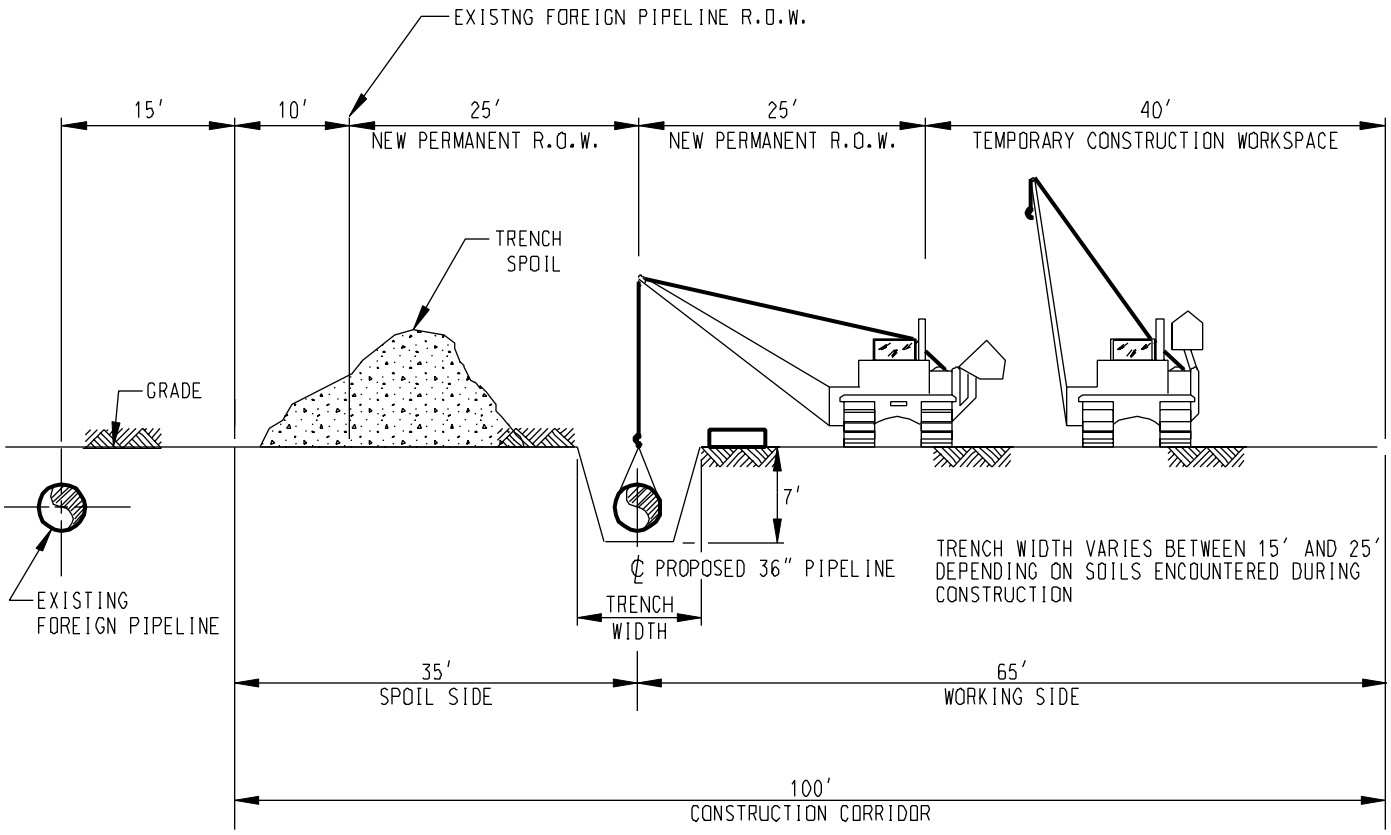

PROFILE

PUBLIC

NO	REVISION	DATE	DRAWN	CHK'D.	APP'D.
A	ISSUED FOR INFORMATION ONLY	09/19/2005	CMR	JW	DR

DRAWN: PEG	DATE: 09/19/2005
CHECKED:	DATE:
ENGINEER:	DATE:
APPROVED:	DATE:
REVIEW:	DATE:
SCALE: N.T.S	SHEET 1 OF 1
JOB NO.: A-5015	
CLIENT/ CLIENT JOB NO.	
DOCUMENT NO.	

TYPICAL UPLAND CROSS SECTION WITH PIPELINE ADJACENT TO FOREIGN PIPELINE WITHOUT TOPSOIL SEGREGATION CONSTRUCTION METHOD 31

DRAWING NO. A5015-00-051307-9118 REV A

User: wendle.smith
R:\A5015\PRJ\Mapping\Ferc_Details\A5015-00-051307-9050_2.dgn
3:57:33 PM
12/08/2005

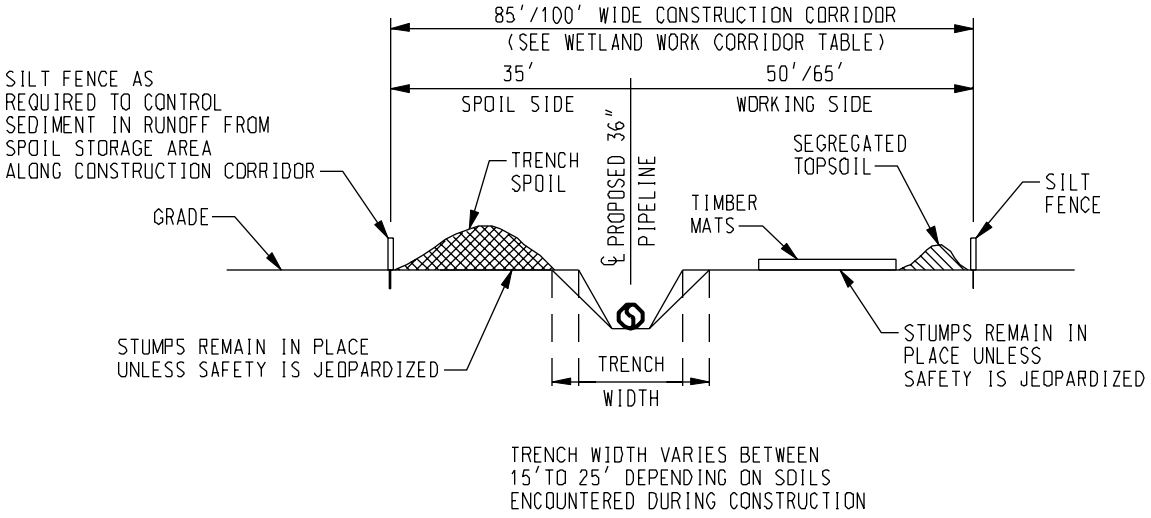

TRENCH WIDTH VARIES BETWEEN 15'TO 25' DEPENDING ON SOILS ENCOUNTERED DURING CONSTRUCTION

CROSS SECTION

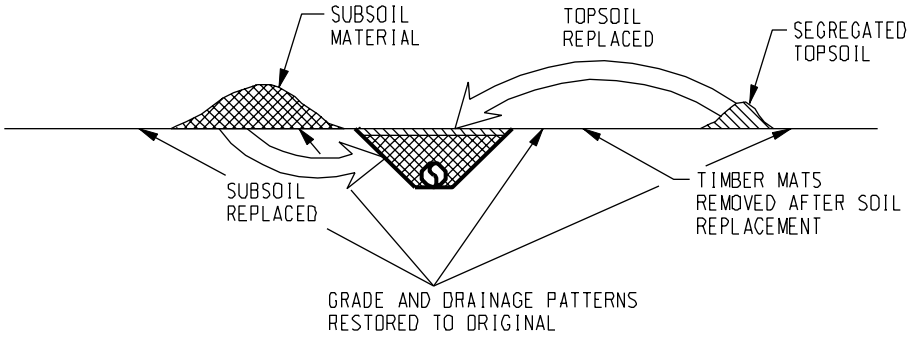

WETLAND RESTORATION

PUBLIC

NO	REVISION	DATE	DRAWN	CHK'D.	APP'D.
A	ISSUED FOR INFORMATION ONLY	09/19/2005	CR	JW	DR

DRAWN: PES	DATE: 09/19/2005
CHECKED:	DATE:
ENGINEER:	DATE:
APPROVED:	DATE:
REVIEW:	DATE:
SCALE: N.T.S	SHEET 2 OF 2
JOB NO.: A-5015	
CLIENT/ CLIENT JOB NO.	
DOCUMENT NO.	

UNSATURATED WETLAND
WITH TOPSOIL SEGREGATION
SINGLE PIPELINE CROSSING
CONSTRUCTION METHOD 35

DRAWING NO. A5015-00-051307-9050 REV A

User: wendle.smith
R:\A5015\PRJ\Mapping\Ferc_Details\A5015-00-051307-9049_2.dgn
3:55:14 PM
12/08/2005

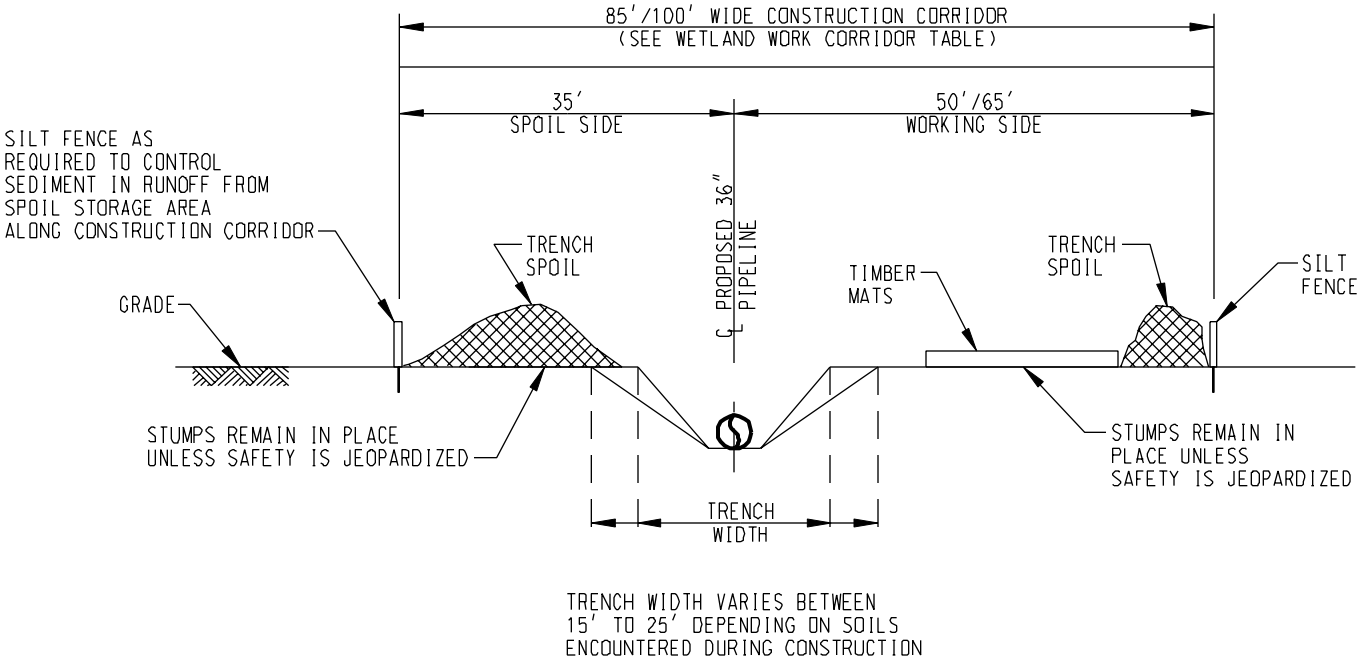

TRENCH WIDTH VARIES BETWEEN
15' TO 25' DEPENDING ON SOILS
ENCOUNTERED DURING CONSTRUCTION

CROSS SECTION

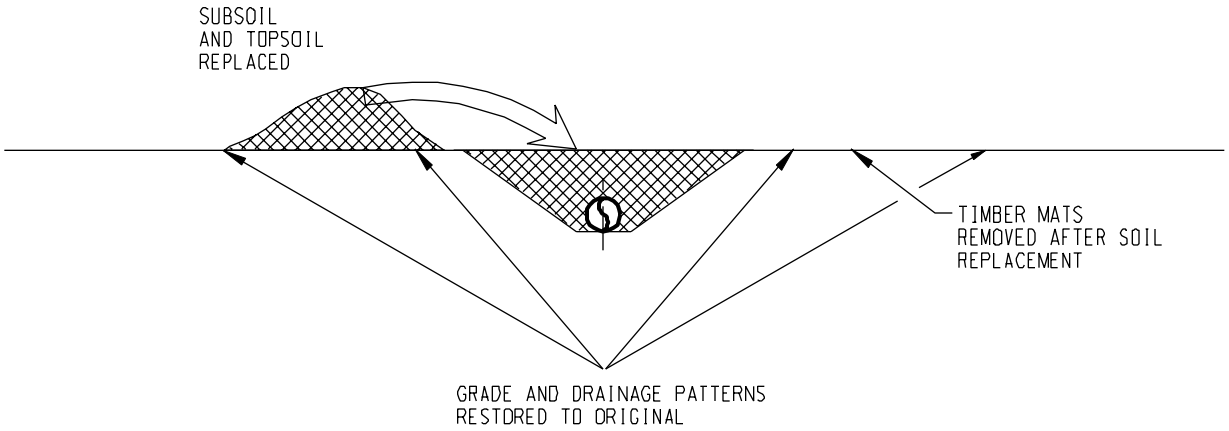

WETLAND RESTORATION

PUBLIC

NO	REVISION	DATE	DRAWN	CHK'D.	APP'D.
A	ISSUED FOR INFORMATION ONLY	09/19/2005	CMR	JW	DR

DRAWN: PES	DATE: 09/19/2005
CHECKED:	DATE:
ENGINEER:	DATE:
APPROVED:	DATE:
REVIEW:	DATE:
SCALE: N.T.S	SHEET 2 OF 2
JOB NO.: A-5015	
CLIENT/ CLIENT JOB NO.	
DOCUMENT NO.	

SATURATED WETLAND
WITHOUT TOPSOIL SEGREGATION
SINGLE PIPELINE CROSSING
CONSTRUCTION METHOD 34

DRAWING NO. A5015-00-051307-9049 REV A